Track spotlights

Zoom Track Light S3-4815

Track spotlight

Track spotlight. 28 W. 15° or 60° beam. 3000, 4000 K. 97 CRI.

- LED source: Citizen

Power **28 W**	Luminous flux **2700–2800 lm**	Colour temperature **3000 K, 4000 K**
CRI **97 CRI**	Beam angles **15°, 60°**	IP rating **IP20**
Certifications **CE, RoHS, EMC, LVD**	Mounting **Magnetic track**	Control **DALI-2, 0-10V, Triac, Casambi, DALI**
Finishes **White, Black, Grey**		

Dimensions

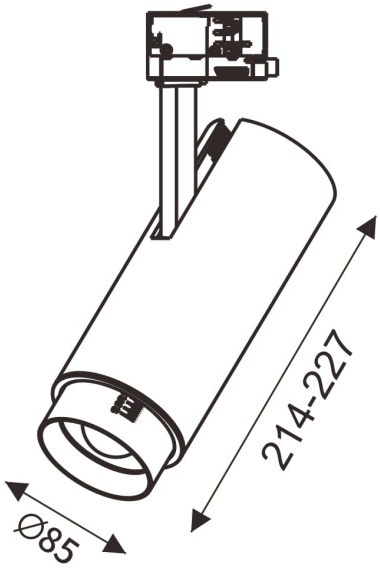

Models

Code	Power	Flux	CRI	Size	Beam
S3-4815	28 W	2700–2800 lm	97 CRI	Ø85 × 214–227 mm	15° 60°

Photometric data

Illuminance on the beam axis (lx) and beam diameter at each mounting distance, per model and beam angle. IES files for every model and beam can be downloaded from the product page.

28 W

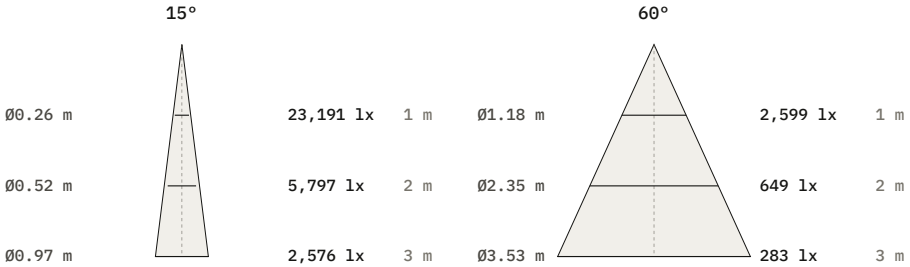

Beam	1 m	2 m	3 m
15°	23,191 lx Ø260 mm	5,797 lx Ø520 mm	2,576 lx Ø970 mm
60°	2,599 lx Ø1180 mm	649 lx Ø2350 mm	283 lx Ø3530 mm

Photometry

Polar curve, on-axis illuminance with beam diameter at 1–5 m, and key figures for S3-4815, from the same data as the IES and LDT files on the product page. Calculated from catalogue data, not measured with a goniophotometer. Other models with the same beam share this distribution, scaled to their luminous flux.

S3-4815, 28 W, 15° beam

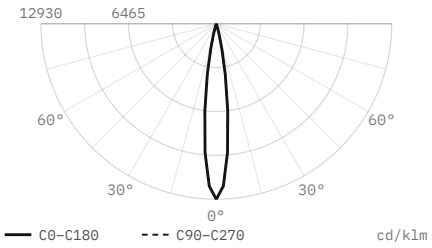

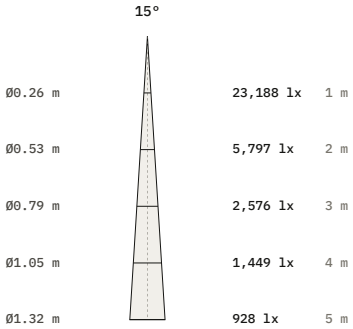

Luminous flux	1,793 lm
Efficacy	64 lm/W
Peak intensity	23,188 cd, 12,930 cd/klm
Beam angle (50%)	15°
Field angle (10%)	27.3°
Cut-off angle (2.5%)	17°
Flux 0–30° / 30–60° / 60–90°	100 / 0 / 0 %
Size	Ø85 × 214 mm
Data	Calculated from catalogue data

S3-4815, 28 W, 60° beam

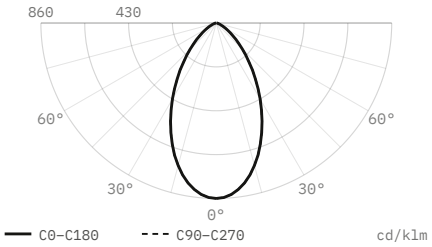

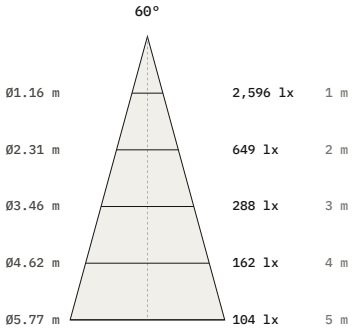

Luminous flux	3,018 lm
Efficacy	108 lm/W
Peak intensity	2,596 cd, 860 cd/klm
Beam angle (50%)	60°
Field angle (10%)	109.4°
Cut-off angle (2.5%)	69°
Flux 0–30° / 30–60° / 60–90°	52.4 / 42.6 / 5 %
Size	Ø85 × 214 mm
Data	Calculated from catalogue data

DiaNoche
service@dianoche.it
dianoche.it

Technical data may change without notice.