Track spotlights

Wall washer S3-6185

Track spotlight

Track spotlight. 24 W. 3000, 4000 K. 97 CRI.

- LED source: Citizen

Power **24 W**	Luminous flux **1800–1900 lm**	Colour temperature **3000 K, 4000 K**
CRI **97 CRI**	IP rating **IP20**	Certifications **CE, RoHS, EMC, LVD**
Mounting **Recessed, Surface, Magnetic track**	Control **DALI-2, 0-10V, Triac**	Finishes **White, Black**

Dimensions

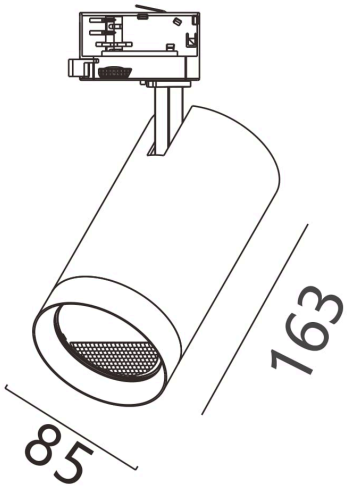

Models

Code	Version	Power	Flux	CRI	Size
S3-6185	Track, wall washer	24 W	1800–1900 lm	97 CRI	85 × 163 mm

Photometry

Polar curve, on-axis illuminance with beam diameter at 1–5 m, and key figures for S3-6185, from the same data as the IES and LDT files on the product page. Calculated from catalogue data, not measured with a goniophotometer. Other models with the same beam share this distribution, scaled to their luminous flux.

S3-6185, 24 W, wall washer

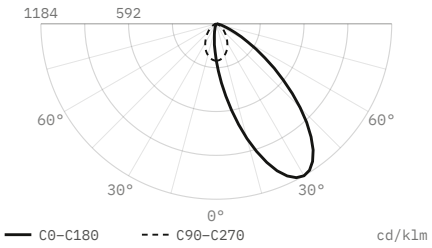

Luminous flux	1,800 lm
Efficacy	75 lm/W
Peak intensity	2,130 cd, 1,184 cd/klm
Beam angle (50%)	asymmetric
Cut-off angle (2.5%)	80°
Flux 0–30° / 30–60° / 60–90°	29.6 / 61.1 / 9.3 %
Size	163 × 85 mm
Data	Calculated from catalogue data

DiaNoche
service@dianoche.it
dianoche.it

Technical data may change without notice.