Recessed

Vero DL1919

Recessed spotlight

Recessed spotlight. 7 W. 2700, 3000, 4000 K. 97 CRI.

- Ceiling cut-out Ø35 mm
- LED source: Citizen

Power **7 W**	Voltage **max 19 V**	Luminous flux **560 lm**
Colour temperature **2700 K, 3000 K, 4000 K**	CRI **97 CRI**	IP rating **IP20**
Certifications **CE**	Mounting **Recessed**	Finishes **White**

Dimensions

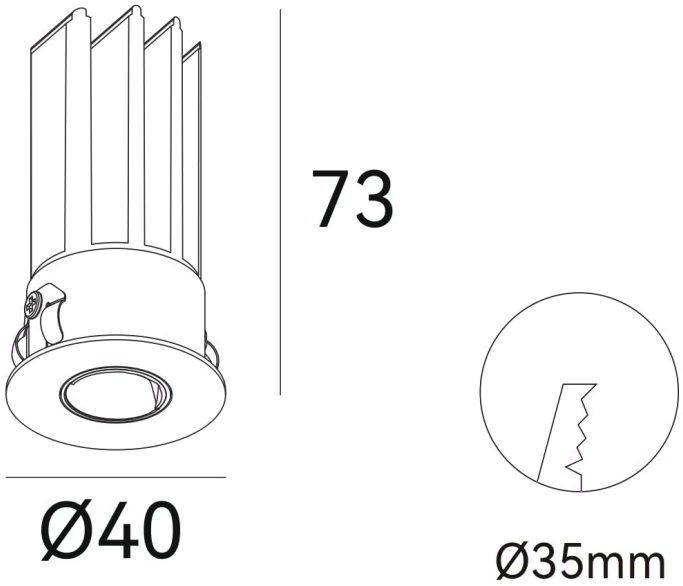

Models

Code	Power	Voltage	Flux	CRI	Size	Cut-out	Notes
DL1919	7 W	max 19 V	560 lm	97 CRI	Ø40 × 73 mm	Ø35 mm	350 mA

Photometry

Polar curve, on-axis illuminance with beam diameter at 1–5 m, and key figures for DL1919, from the same data as the IES and LDT files on the product page. Calculated from catalogue data, not measured with a goniophotometer. Other models with the same beam share this distribution, scaled to their luminous flux.

DL1919, 7 W, wide distribution

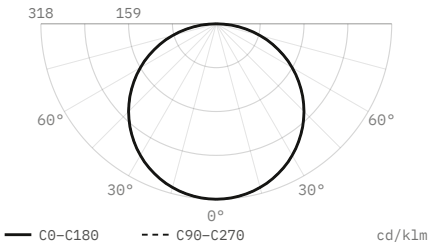

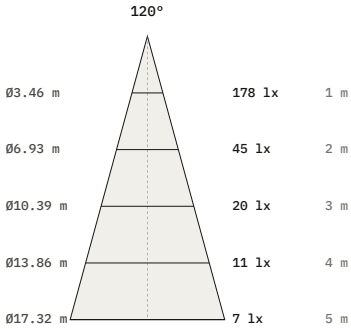

Luminous flux	560 lm
Efficacy	80 lm/W
Peak intensity	178 cd, 318 cd/klm
Beam angle (50%)	120°
Field angle (10%)	168.5°
Cut-off angle (2.5%)	88.5°
Flux 0–30° / 30–60° / 60–90°	25 / 50 / 25 %
Size	Ø40 × 73 mm
Data	Calculated from catalogue data

DiaNoche
service@dianoche.it
dianoche.it

Technical data may change without notice.