Track spotlights

Track Wall Washer TR0099-0214

Track spotlight

Track spotlight. 15 W. 2700, 3000, 4000 K. 97 CRI.

- LED source: Citizen

Power **15 W**	Voltage **230 V AC**	Luminous flux **1300 lm**
Colour temperature **2700 K, 3000 K, 4000 K**	CRI **97 CRI**	IP rating **IP20**
Certifications **CE**	Mounting **Magnetic track**	Finishes **White, Black**

Dimensions

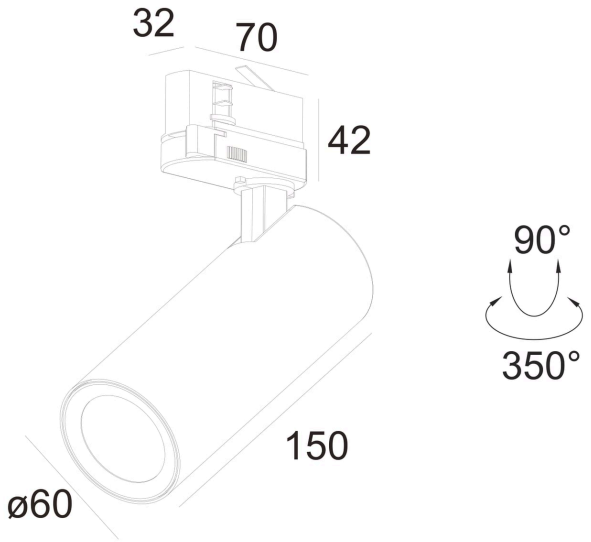

Models

Code	Version	Power	Voltage	Flux	CRI	Size
TR0099	36° × 39°, wall washer	15 W	230 V AC	1300 lm	97 CRI	Tube Ø60 × 150 mm; adapter 70 × 32 × 42 mm

Finishes

Black

White

Photometry

Polar curve, on-axis illuminance with beam diameter at 1–5 m, and key figures for TR0099, from the same data as the IES and LDT files on the product page. Calculated from catalogue data, not measured with a goniophotometer. Other models with the same beam share this distribution, scaled to their luminous flux.

TR0099, 15 W, wall washer

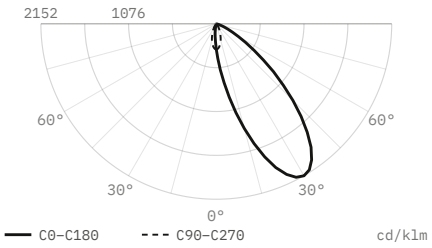

Luminous flux	1,300 lm
Efficacy	87 lm/W
Peak intensity	2,797 cd, 2,152 cd/klm
Beam angle (50%)	asymmetric
Cut-off angle (2.5%)	71.5°
Flux 0–30° / 30–60° / 60–90°	39.2 / 57.5 / 3.3 %
Size	Ø60 × 150 mm
Data	Calculated from catalogue data

DiaNoche
service@dianoche.it
dianoche.it

Technical data may change without notice.