Linear

Tour TR0205

Linear track luminaire

Linear track luminaire. 15 W. 24° or 36° beam. 2700, 3000, 4000 K. 97 CRI.

- LED source: Citizen

Power **15 W**	Voltage **48 V DC**	Luminous flux **1180 lm**
Colour temperature **2700 K, 3000 K, 4000 K**	CRI **97 CRI**	Beam angles **24°, 36°**
IP rating **IP20**	Certifications **CE, Class III**	Mounting **Magnetic track**
Finishes **Black**		

Dimensions

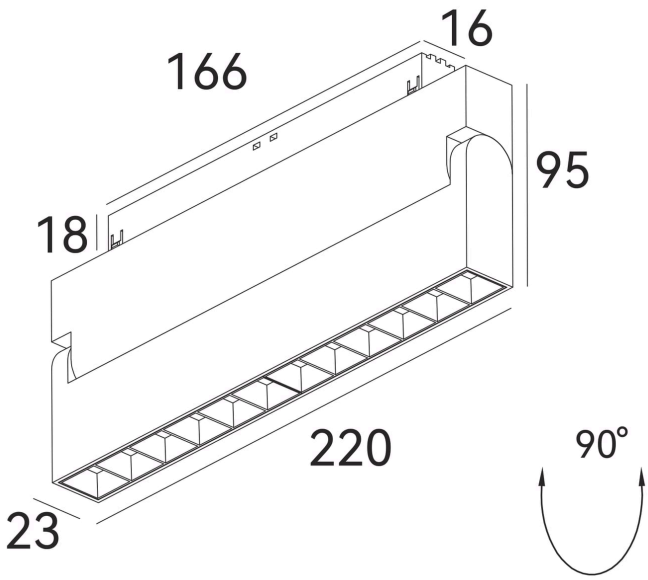

Models

Code	Power	Voltage	Flux	CRI	Size	Beam
TR0205	15 W	48 V DC	1180 lm	97 CRI	L220 x W23 x H95 mm	24° 36°

Photometry

Polar curve, on-axis illuminance with beam diameter at 1–5 m, and key figures for TR0205, from the same data as the IES and LDT files on the product page. Calculated from catalogue data, not measured with a goniophotometer. Other models with the same beam share this distribution, scaled to their luminous flux.

TR0205, 15 W, 24° beam

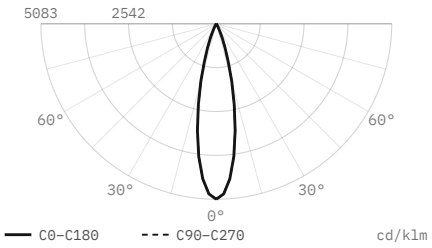

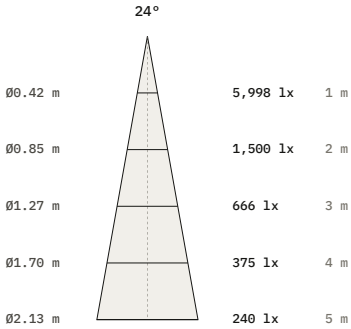

Luminous flux	1,180 lm
Efficacy	79 lm/W
Peak intensity	5,998 cd, 5,083 cd/klm
Beam angle (50%)	24°
Field angle (10%)	43.7°
Cut-off angle (2.5%)	27.5°
Flux 0–30° / 30–60° / 60–90°	98.7 / 1.3 / 0 %
Size	220 × 23 × 95 mm
Data	Calculated from catalogue data

TR0205, 15 W, 36° beam

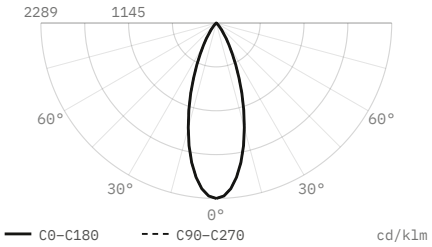

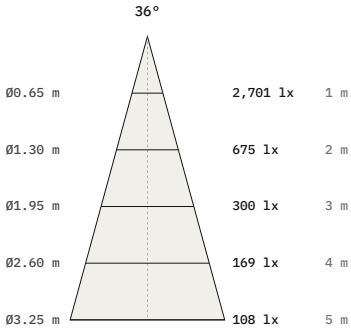

Luminous flux	1,180 lm
Efficacy	79 lm/W
Peak intensity	2,701 cd, 2,289 cd/klm
Beam angle (50%)	36°
Field angle (10%)	65.6°
Cut-off angle (2.5%)	41.5°
Flux 0–30° / 30–60° / 60–90°	86.1 / 13.9 / 0 %
Size	220 × 23 × 95 mm
Data	Calculated from catalogue data

DiaNoche
service@dianoche.it
dianoche.it

Technical data may change without notice.