Track spotlights

Tour TR0188

Track spotlight

Track spotlight. 5 or 8 W. Beam angles 15° to 60°, by model. 2700, 3000, 4000 K. 97 CRI.

- LED source: Citizen

Power **5 W, 8 W**	Voltage **48 V DC**	Luminous flux **400 lm, 630 lm**
Colour temperature **2700 K, 3000 K, 4000 K**	CRI **97 CRI**	Beam angles **15°, 24°, 36°, 60°**
IP rating **IP20**	Certifications **CE, Class III**	Mounting **Magnetic track**
Finishes **Black**		

Dimensions

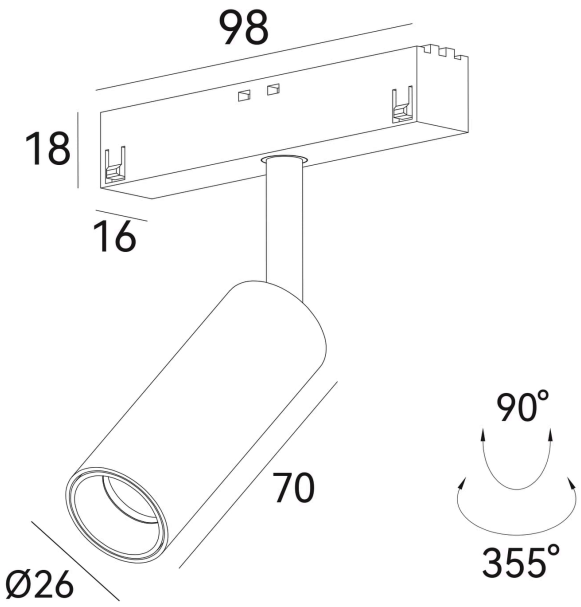

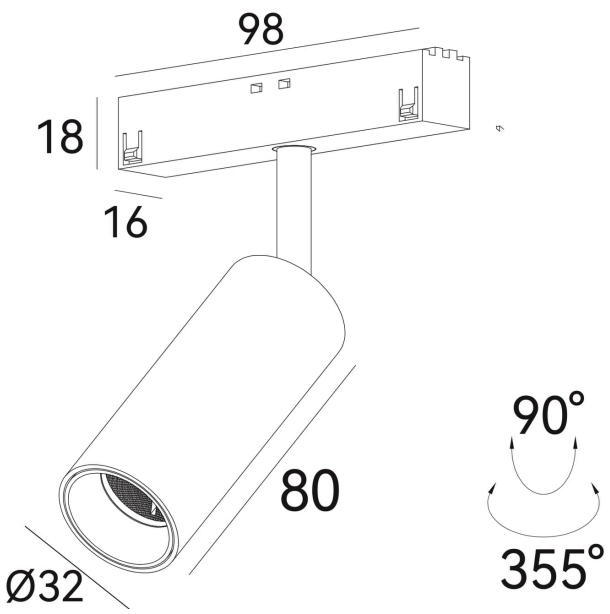

Models

Code	Power	Voltage	Flux	CRI	Size	Beam
TR0188	5 W	48 V DC	400 lm	97 CRI	Ø26 × 70 mm	15° 24° 36°
TR0189	8 W	48 V DC	630 lm	97 CRI	Ø32 × 80 mm	15° 24° 36° 60°

Photometry

Polar curve, on-axis illuminance with beam diameter at 1–5 m, and key figures for TR0189, from the same data as the IES and LDT files on the product page. Calculated from catalogue data, not measured with a goniophotometer. Other models with the same beam share this distribution, scaled to their luminous flux.

TR0189, 8 W, 15° beam

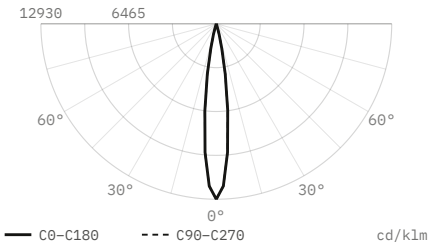

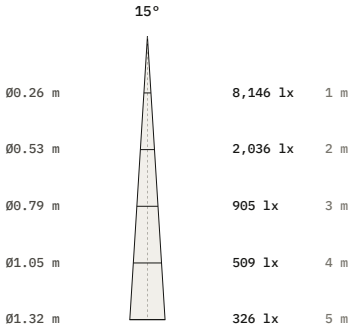

Luminous flux	630 lm
Efficacy	79 lm/W
Peak intensity	8,146 cd, 12,930 cd/klm
Beam angle (50%)	15°
Field angle (10%)	27.3°
Cut-off angle (2.5%)	17°
Flux 0–30° / 30–60° / 60–90°	100 / 0 / 0 %
Size	Ø32 × 80 mm
Data	Calculated from catalogue data

TR0189, 8 W, 24° beam

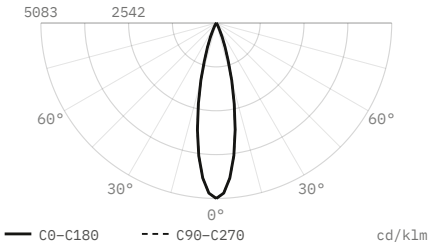

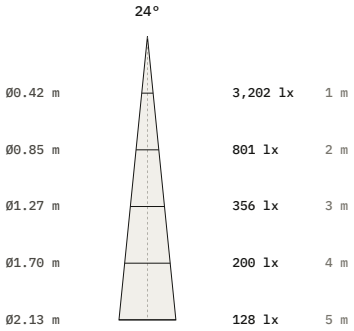

Luminous flux	630 lm
Efficacy	79 lm/W
Peak intensity	3,202 cd, 5,083 cd/klm
Beam angle (50%)	24°
Field angle (10%)	43.7°
Cut-off angle (2.5%)	27.5°
Flux 0–30° / 30–60° / 60–90°	98.7 / 1.3 / 0 %
Size	Ø32 × 80 mm
Data	Calculated from catalogue data

TR0189, 8 W, 36° beam

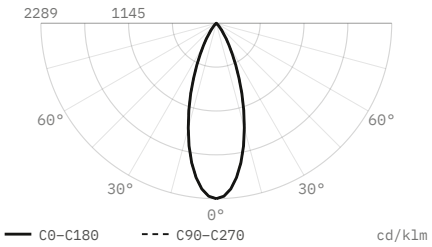

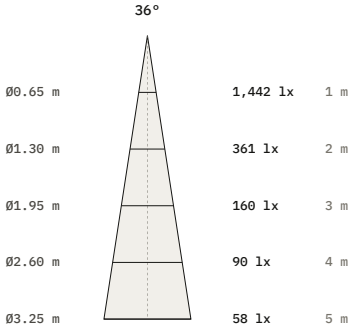

Luminous flux	630 lm
Efficacy	79 lm/W
Peak intensity	1,442 cd, 2,289 cd/klm
Beam angle (50%)	36°
Field angle (10%)	65.6°
Cut-off angle (2.5%)	41.5°
Flux 0–30° / 30–60° / 60–90°	86.1 / 13.9 / 0 %
Size	Ø32 × 80 mm
Data	Calculated from catalogue data

TR0189, 8 W, 60° beam

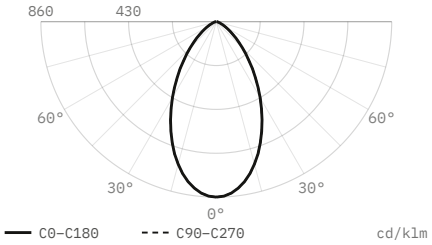

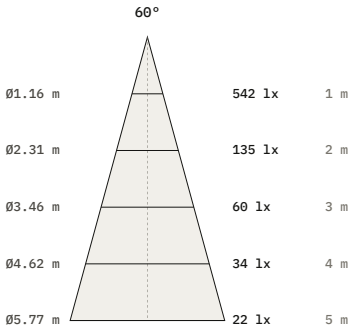

Luminous flux	630 lm
Efficacy	79 lm/W
Peak intensity	542 cd, 860 cd/klm
Beam angle (50%)	60°
Field angle (10%)	109.4°
Cut-off angle (2.5%)	69°
Flux 0–30° / 30–60° / 60–90°	52.4 / 42.6 / 5 %
Size	Ø32 × 80 mm
Data	Calculated from catalogue data

DiaNoche
service@dianoche.it
dianoche.it

Technical data may change without notice.