Outdoor

T1-06-1

Outdoor luminaire

Outdoor luminaire. 6 W. 3000, 4000, 5700 K. IP65. 97 CRI.

- LED source: Citizen

Power **6 W**	Voltage **33–40 V**	Colour temperature **3000 K, 4000 K, 5700 K**
CRI **97 CRI**	IP rating **IP65**	Mounting **Surface, Wall**
Control **On/Off**	Finishes **Black**	

Dimensions

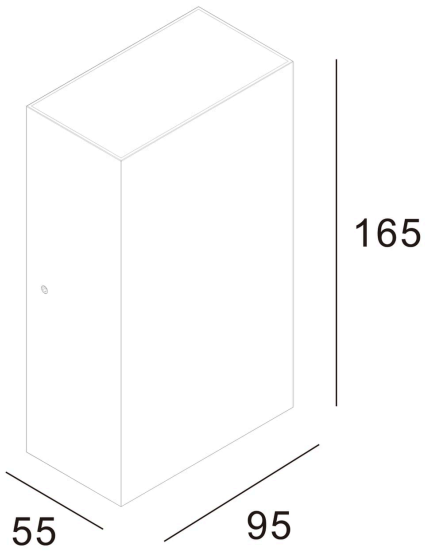

Models

Code	Power	Voltage	CRI	Size	Notes
T1-06-1	6 W	33–40 V	97 CRI	165 × 95 × 55 mm	150 mA

Photometry

Polar curve, on-axis illuminance with beam diameter at 1–5 m, and key figures for T1-06-1, from the same data as the IES and LDT files on the product page. Estimated from catalogue data, not measured with a goniophotometer. Other models with the same beam share this distribution, scaled to their luminous flux.

T1-06-1, 6 W, wide distribution

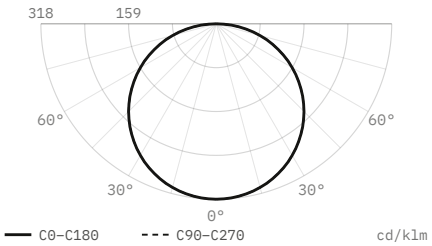

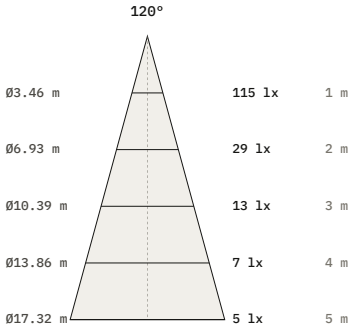

Luminous flux	360 lm
Efficacy	60 lm/W
Peak intensity	115 cd, 318 cd/klm
Beam angle (50%)	120°
Field angle (10%)	168.5°
Cut-off angle (2.5%)	88.5°
Flux 0–30° / 30–60° / 60–90°	25 / 50 / 25 %
Size	165 × 95 × 55 mm
Data	Estimated from catalogue data

DiaNoche
service@dianoche.it
dianoche.it

Technical data may change without notice.