Outdoor

Star DL1700

Outdoor luminaire

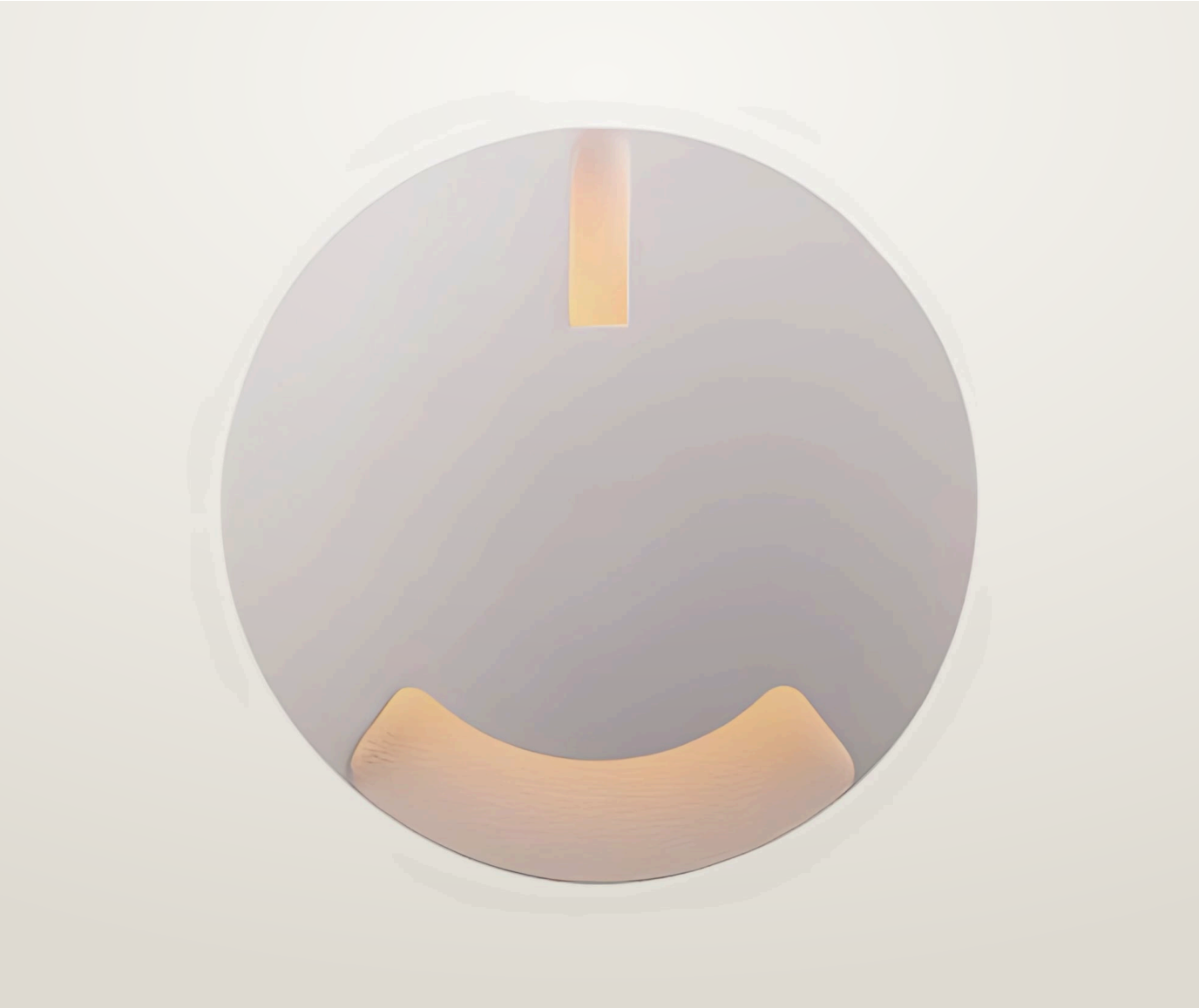

Outdoor luminaire.

- Ceiling cut-out Ø40 mm
- LED source: Citizen

Voltage **max 3 V**	Luminous flux **80 / 160 lm**	Colour temperature **2700 K, 3000 K, 4000 K**
CRI **97 CRI**	IP rating **IP67**	Certifications **CE**
Mounting **Floor, Recessed, Wall**	Finishes **Black**	

Dimensions

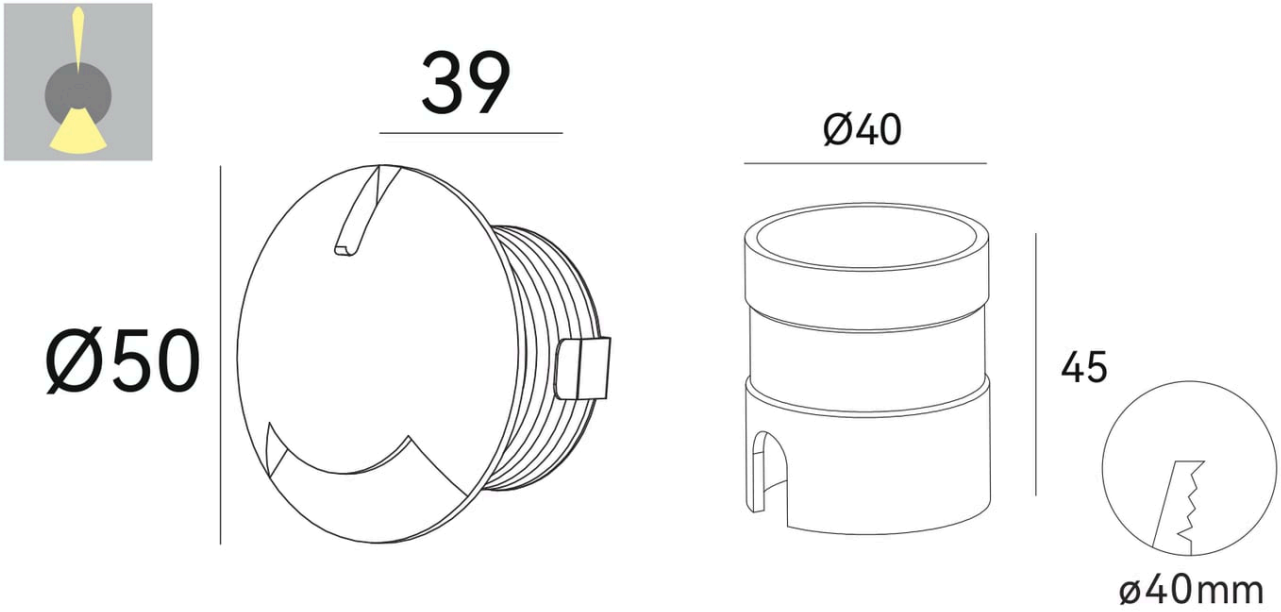

Models

Code	Voltage	Flux	CRI	Size	Cut-out	Notes
DL1700	max 3 V	80 / 160 lm	97 CRI	Ø50 × 39 mm	Ø40 mm	350 / 700 mA

Photometry

Polar curve, on-axis illuminance with beam diameter at 1–5 m, and key figures for DL1700, from the same data as the IES and LDT files on the product page. Calculated from catalogue data, not measured with a goniophotometer. Other models with the same beam share this distribution, scaled to their luminous flux.

DL1700, wide distribution

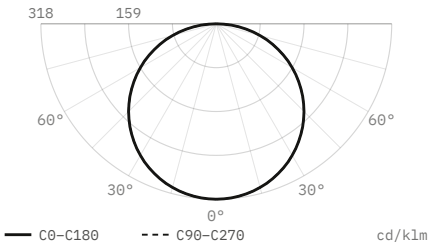

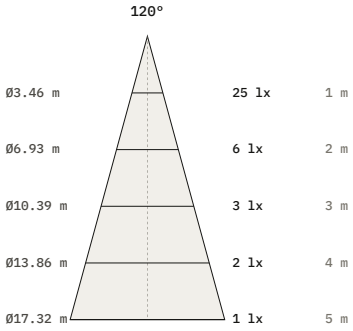

Luminous flux	80 lm
Peak intensity	25 cd, 318 cd/klm
Beam angle (50%)	120°
Field angle (10%)	168.5°
Cut-off angle (2.5%)	88.5°
Flux 0–30° / 30–60° / 60–90°	25 / 50 / 25 %
Size	Ø50 × 39 mm
Data	Calculated from catalogue data

DiaNoche
service@dianoche.it
dianoche.it

Technical data may change without notice.