Outdoor

# Star DL1540

Outdoor luminaire

Outdoor luminaire. 3 W. 2700, 3000, 4000 K. IP67. 97 CRI.

- Ceiling cut-out Ø49 mm
- LED source: Citizen

| | | |
|---|---|---|
| Power<br>**3 W** | Voltage<br>**24 V DC** | Luminous flux<br>**160 lm** |
| Colour temperature<br>**2700 K, 3000 K, 4000 K** | CRI<br>**97 CRI** | IP rating<br>**IP67** |
| Certifications<br>**CE** | Mounting<br>**Floor, Recessed, Wall** | Finishes<br>**Black** |

## Dimensions

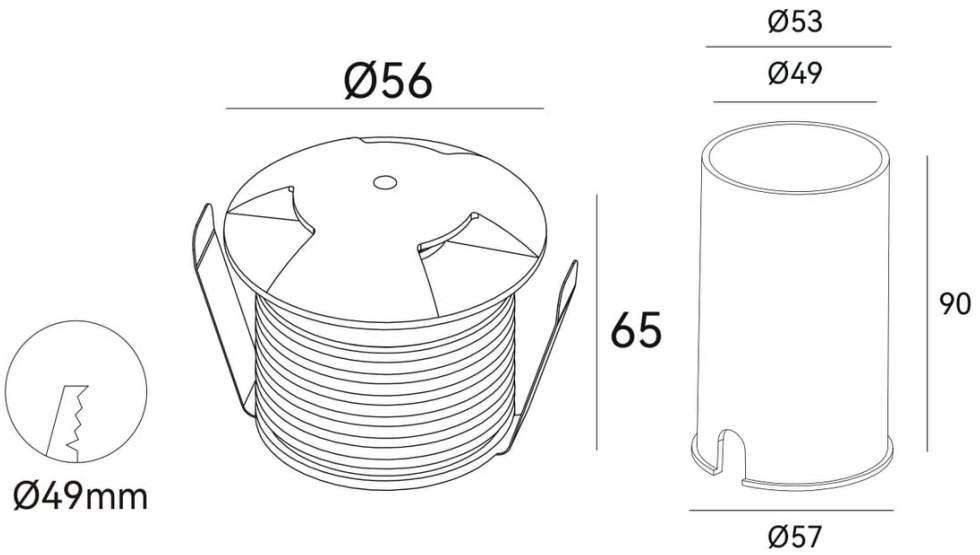


## Models

| Code | Version | Power | Voltage | Flux | CRI | Size | Cut-out |
|---|---|---|---|---|---|---|---|
| **DL1540** | 316L stainless steel inground, 24 V DC 3 W | 3 W | 24 V DC | 160 lm | 97 CRI | Ø56 × 65 mm | Ø49 mm |

# Photometry

Polar curve, on-axis illuminance with beam diameter at 1–5 m, and key figures for DL1540, from the same data as the IES and LDT files on the product page. Calculated from catalogue data, not measured with a goniophotometer. Other models with the same beam share this distribution, scaled to their luminous flux.

## DL1540, 3 W, wide distribution

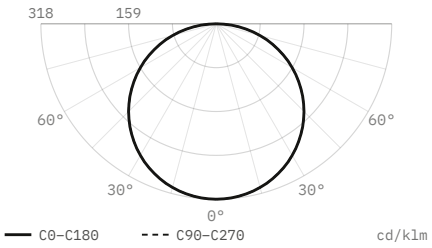


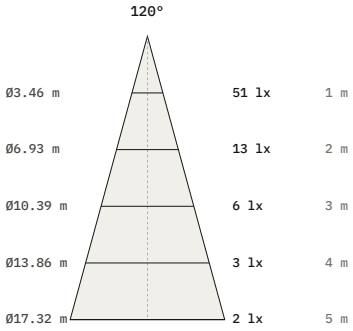


| | |
|---|---|
| Luminous flux | 160 lm |
| Efficacy | 53 lm/W |
| Peak intensity | 51 cd, 318 cd/klm |
| Beam angle (50%) | 120° |
| Field angle (10%) | 168.5° |
| Cut-off angle (2.5%) | 88.5° |
| Flux 0–30° / 30–60° / 60–90° | 25 / 50 / 25 % |
| Size | Ø56 × 65 mm |
| Data | Calculated from catalogue data |

DiaNoche
service@dianoche.it
dianoche.it

Technical data may change without notice.