Outdoor

Star DL1538

Outdoor luminaire

Outdoor luminaire. 3 W. 2700, 3000, 4000 K. IP67. 97 CRI.

- Ceiling cut-out Ø49 mm
- LED source: Citizen

Power **3 W**	Voltage **24 V DC**	Luminous flux **160 lm**
Colour temperature **2700 K, 3000 K, 4000 K**	CRI **97 CRI**	IP rating **IP67**
Certifications **CE**	Mounting **Floor, Recessed, Wall**	Finishes **Black**

Dimensions

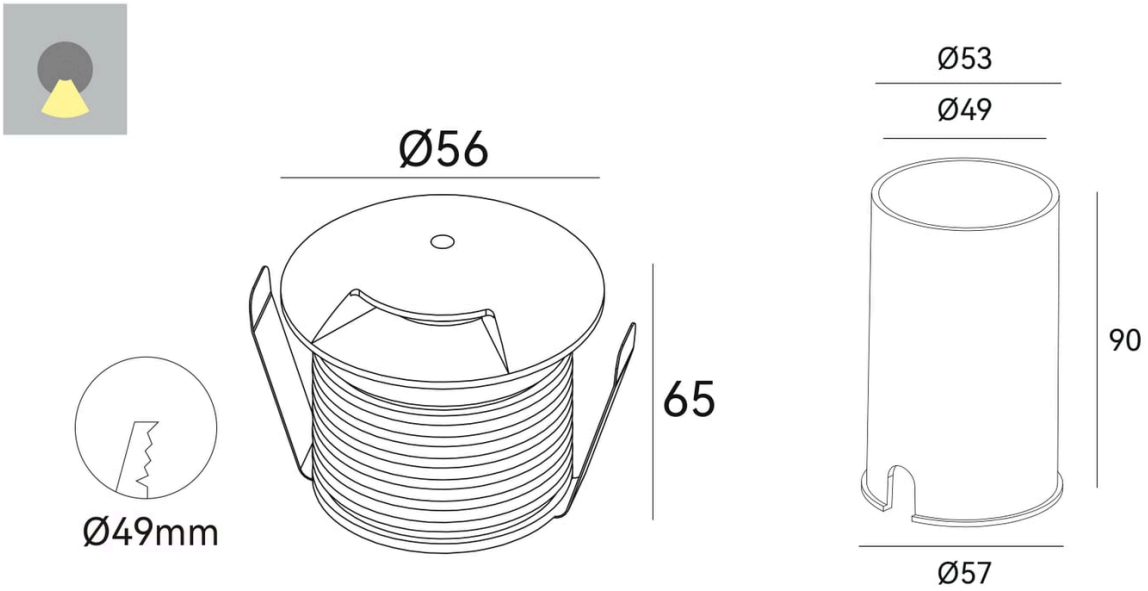

Models

Code	Version	Power	Voltage	Flux	CRI	Size	Cut-out
DL1538	316L stainless steel inground, 24 V DC 3 W	3 W	24 V DC	160 lm	97 CRI	Ø56 × 65 mm	Ø49 mm

Photometry

Polar curve, on-axis illuminance with beam diameter at 1–5 m, and key figures for DL1538, from the same data as the IES and LDT files on the product page. Calculated from catalogue data, not measured with a goniophotometer. Other models with the same beam share this distribution, scaled to their luminous flux.

DL1538, 3 W, wide distribution

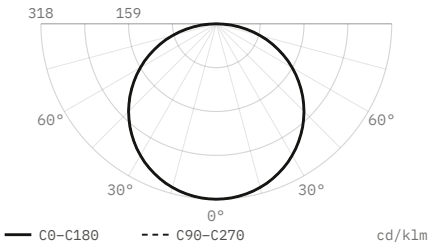

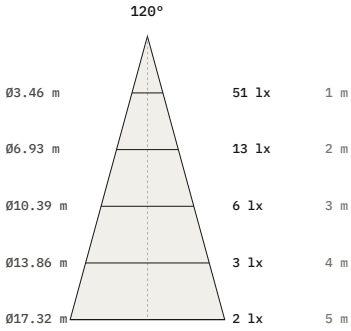

Luminous flux	160 lm
Efficacy	53 lm/W
Peak intensity	51 cd, 318 cd/klm
Beam angle (50%)	120°
Field angle (10%)	168.5°
Cut-off angle (2.5%)	88.5°
Flux 0–30° / 30–60° / 60–90°	25 / 50 / 25 %
Size	Ø56 × 65 mm
Data	Calculated from catalogue data

DiaNoche
service@dianoche.it
dianoche.it

Technical data may change without notice.