Wall

Star DL1195

Wall light

Wall light. 2 W. 2700, 3000, 4000 K. IP67. 97 CRI.

- Ceiling cut-out Ø40 mm
- LED source: Citizen

Power **2 W**	Voltage **max 3 V**	Luminous flux **100 lm**
Colour temperature **2700 K, 3000 K, 4000 K**	CRI **97 CRI**	IP rating **IP67**
Certifications **CE**	Mounting **Recessed, Wall**	Finishes **Black**

Dimensions

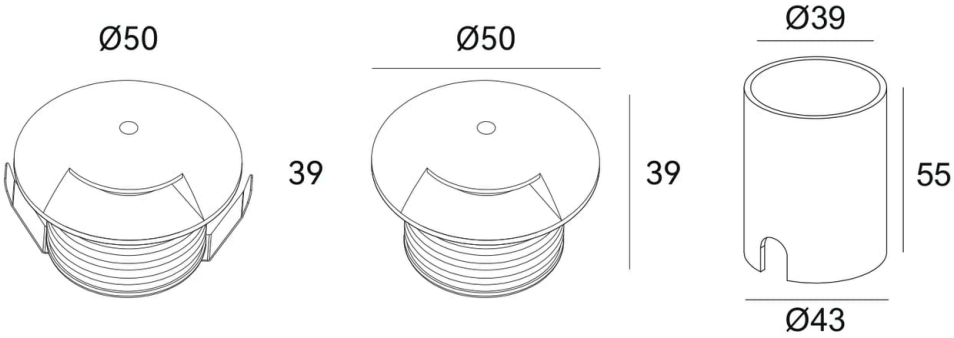

Models

Code	Power	Voltage	Flux	CRI	Size	Cut-out	Notes
DL1195	2 W	max 3 V	100 lm	97 CRI	Ø50 × 39 mm (flange); body Ø39/Ø43 × 55 mm	Ø40 mm	700 mA

Photometry

Polar curve, on-axis illuminance with beam diameter at 1–5 m, and key figures for DL1195, from the same data as the IES and LDT files on the product page. Calculated from catalogue data, not measured with a goniophotometer. Other models with the same beam share this distribution, scaled to their luminous flux.

DL1195, 2 W, wide distribution

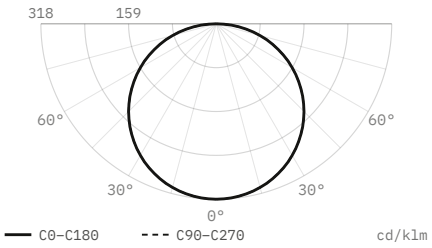

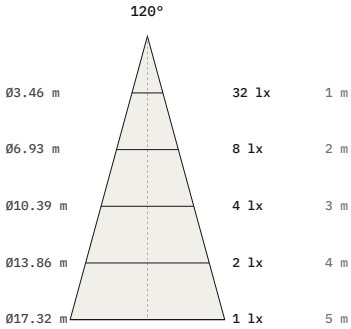

Luminous flux	100 lm
Efficacy	50 lm/W
Peak intensity	32 cd, 318 cd/klm
Beam angle (50%)	120°
Field angle (10%)	168.5°
Cut-off angle (2.5%)	88.5°
Flux 0–30° / 30–60° / 60–90°	25 / 50 / 25 %
Size	Ø50 × 39 mm
Data	Calculated from catalogue data

DiaNoche
service@dianoche.it
dianoche.it

Technical data may change without notice.