Wall

Star DL1170

Wall light

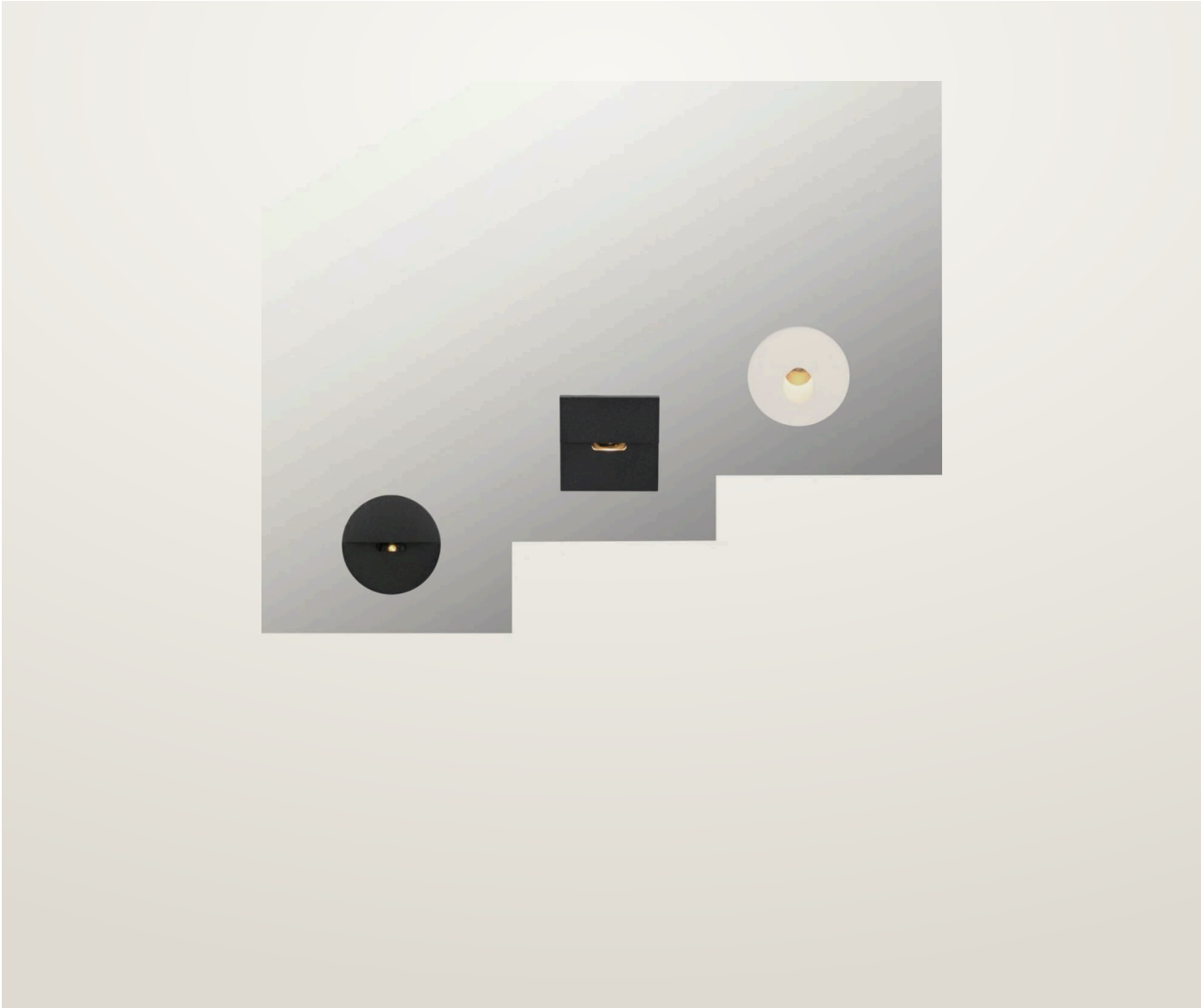

Wall light.

- Ceiling cut-out Ø32 mm
- LED source: Citizen

Voltage **max 3 V, 24 V DC**	Luminous flux **50 / 110 lm**	Colour temperature **2700 K, 3000 K, 4000 K**
CRI **97 CRI**	IP rating **IP65**	Certifications **CE**
Mounting **Recessed, Wall**	Finishes **White, Black**	

Dimensions

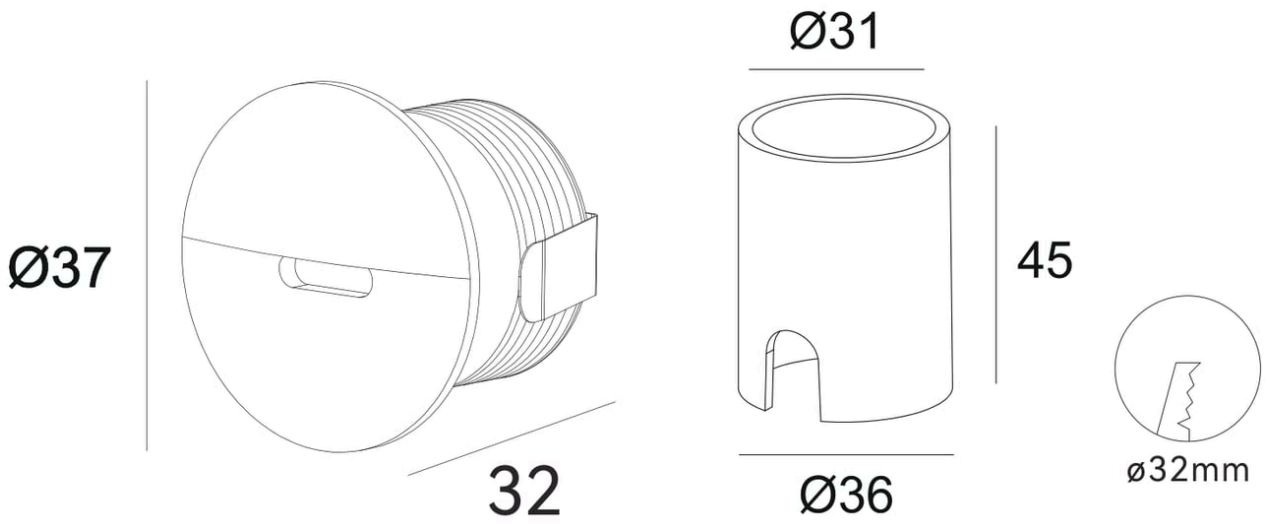

Models

Code	Voltage	Flux	CRI	Size	Cut-out	Notes
DL1170	max 3 V, 24 V DC	50 / 110 lm	97 CRI	Ø37 × 32 mm; housing Ø31/Ø36 × 45 mm	Ø32 mm	350 / 700 mA

Finishes

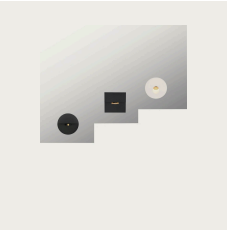

Black

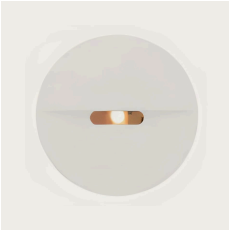

White

Photometry

Polar curve, on-axis illuminance with beam diameter at 1–5 m, and key figures for DL1170, from the same data as the IES and LDT files on the product page. Calculated from catalogue data, not measured with a goniophotometer. Other models with the same beam share this distribution, scaled to their luminous flux.

DL1170, wide distribution

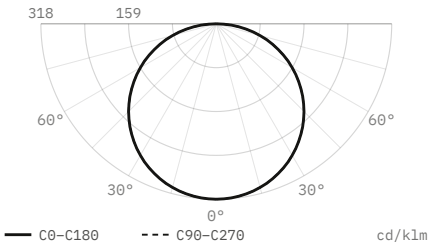

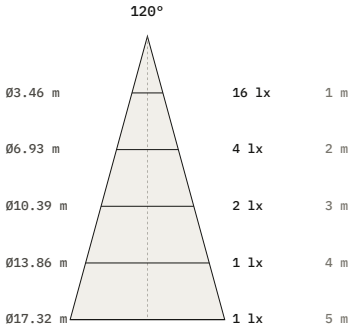

Luminous flux	50 lm
Peak intensity	16 cd, 318 cd/klm
Beam angle (50%)	120°
Field angle (10%)	168.5°
Cut-off angle (2.5%)	88.5°
Flux 0–30° / 30–60° / 60–90°	25 / 50 / 25 %
Size	Ø37 × 32 mm
Data	Calculated from catalogue data

DiaNoche
service@dianoche.it
dianoche.it

Technical data may change without notice.