Slim 10 mm system

ST-6302

Slim 10 mm pendant

Pendant for the Slim 10 mm magnetic track. 9, 12 or 18 W. Three beam angles, 30° to 90°. 2700, 3000, 4000 K. 97 CRI.

- LED source: Citizen
- UGR <19

Power **9 W, 12 W, 18 W**	Voltage **48 V**	Luminous flux **810 lm, 1080 lm, 1600 lm**
Colour temperature **2700 K, 3000 K, 4000 K**	CRI **97 CRI**	Beam angles **30°, 60°, 90°**
IP rating **IP20**	Certifications **CE, RoHS**	Mounting **Suspended, Magnetic track**
Finishes **White, Black**		

Dimensions

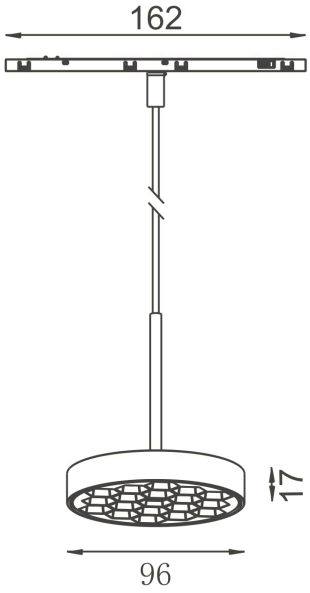

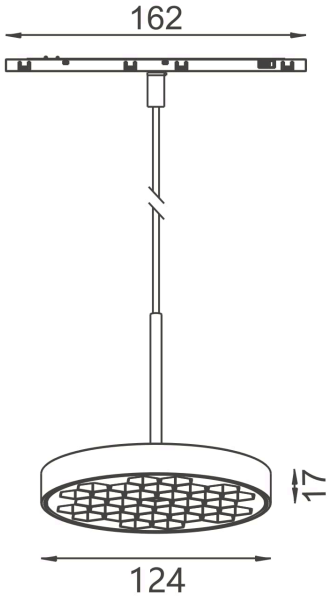

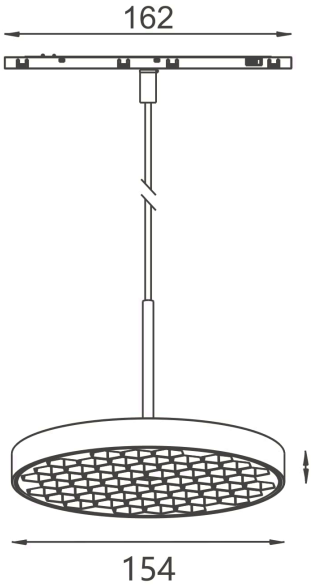

Models

Code	Power	Voltage	Flux	CRI	Size	Beam
ST-6302	9 W	48 V	810 lm	97 CRI	96 × 17 mm (disc); track connector 162 mm	30° 60° 90°
ST-6303	12 W	48 V	1080 lm	97 CRI	124 × 17 mm (disc); track connector 162 mm	30° 60° 90°
ST-6304	18 W	48 V	1600 lm	97 CRI	154 × 17 mm (disc); track connector 162 mm	30° 60° 90°

Finishes

Photometry

Polar curve, on-axis illuminance with beam diameter at 1–5 m, and key figures for ST-6304, from the same data as the IES and LDT files on the product page. Calculated from catalogue data, not measured with a goniophotometer. Other models with the same beam share this distribution, scaled to their luminous flux.

ST-6304, 18 W, 30° beam

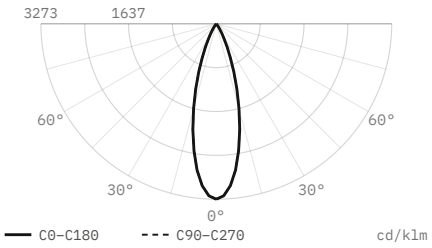

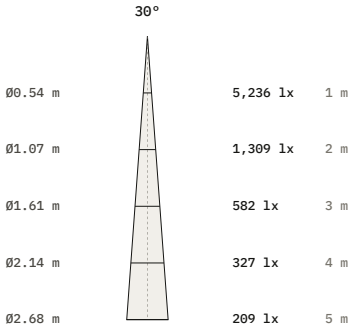

Luminous flux	1,600 lm
Efficacy	89 lm/W
Peak intensity	5,236 cd, 3,273 cd/klm
Beam angle (50%)	30°
Field angle (10%)	54.7°
Cut-off angle (2.5%)	34.5°
Flux 0–30° / 30–60° / 60–90°	94 / 6 / 0 %
Size	154 × 17 mm
Data	Calculated from catalogue data

ST-6304, 18 W, 60° beam

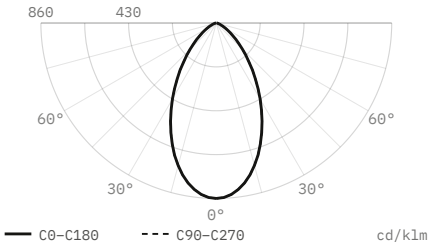

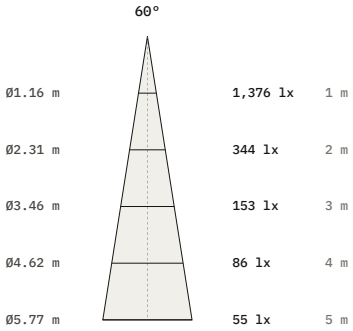

Luminous flux	1,600 lm
Efficacy	89 lm/W
Peak intensity	1,376 cd, 860 cd/klm
Beam angle (50%)	60°
Field angle (10%)	109.4°
Cut-off angle (2.5%)	69°
Flux 0–30° / 30–60° / 60–90°	52.4 / 42.6 / 5 %
Size	154 × 17 mm
Data	Calculated from catalogue data

ST-6304, 18 W, 90° beam

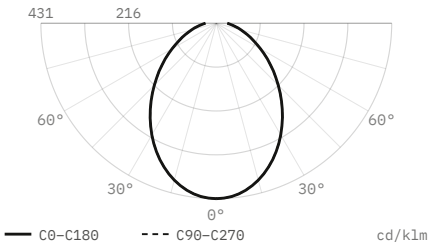

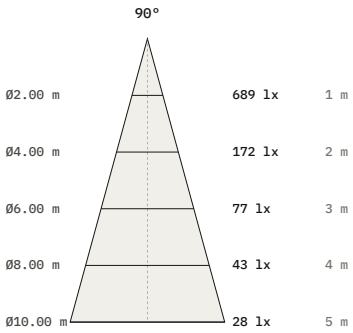

Luminous flux	1,600 lm
Efficacy	89 lm/W
Peak intensity	689 cd, 431 cd/klm
Beam angle (50%)	90°
Field angle (10%)	164°
Cut-off angle (2.5%)	90°
Flux 0–30° / 30–60° / 60–90°	31.2 / 48 / 20.8 %
Size	154 × 17 mm
Data	Calculated from catalogue data

DiaNoche
Via Tortona, 31, 20144 Milano MI, Italy
service@dianoche.it
dianoche.it

Technical data may change without notice.