Track spotlights

S3-4255

Track spotlight

Track spotlight. 30 W. 15° or 60° beam. 3000, 4000 K. 97 CRI.

- LED source: Citizen

Power **30 W**	Luminous flux **3100–3200 lm**	Colour temperature **3000 K, 4000 K**
CRI **97 CRI**	Beam angles **15°, 60°**	IP rating **IP20**
Certifications **CE, RoHS, EMC, LVD**	Mounting **Magnetic track**	Control **DALI, 0-10V, Triac, Casambi**
Finishes **White, Black, Grey**		

Dimensions

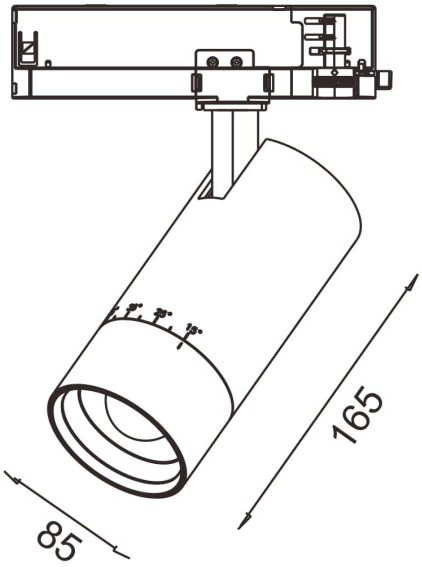

Models

Code	Power	Flux	CRI	Size	Beam
S3-4255	30 W	3100–3200 lm	97 CRI	85 × 165 mm	15° 60°

Finishes

Black

White

Grey

Photometric data

Illuminance on the beam axis (lx) and beam diameter at each mounting distance, per model and beam angle. IES files for every model and beam can be downloaded from the product page.

30 W

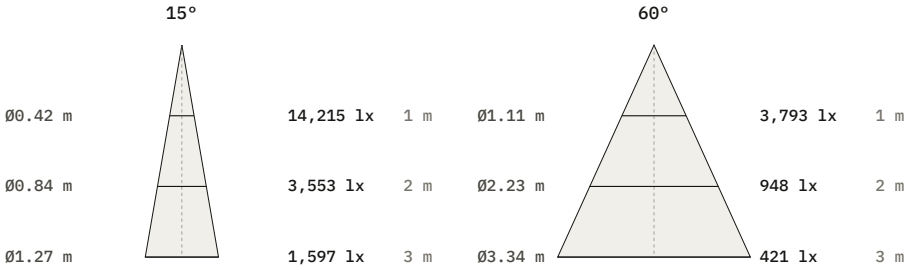

Beam	1 m	2 m	3 m
15°	14,215 lx Ø420 mm	3,553 lx Ø840 mm	1,597 lx Ø1270 mm
60°	3,793 lx Ø1110 mm	948 lx Ø2230 mm	421 lx Ø3340 mm

Photometry

Polar curve, on-axis illuminance with beam diameter at 1–5 m, and key figures for S3-4255, from the same data as the IES and LDT files on the product page. Calculated from catalogue data, not measured with a goniophotometer. Other models with the same beam share this distribution, scaled to their luminous flux.

S3-4255, 30 W, 15° beam

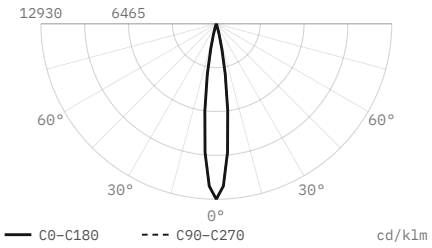

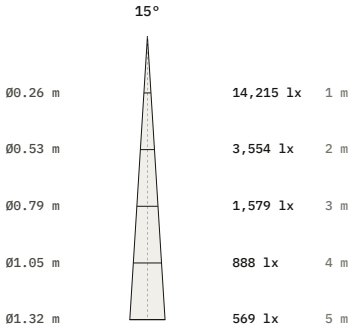

Luminous flux	1,099 lm
Efficacy	37 lm/W
Peak intensity	14,215 cd, 12,930 cd/klm
Beam angle (50%)	15°
Field angle (10%)	27.3°
Cut-off angle (2.5%)	17°
Flux 0–30° / 30–60° / 60–90°	100 / 0 / 0 %
Size	165 × 85 mm
Data	Calculated from catalogue data

S3-4255, 30 W, 60° beam

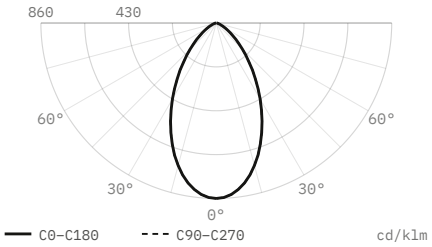

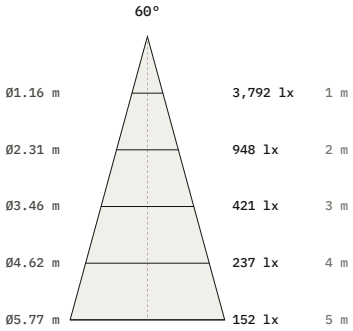

Luminous flux	4,408 lm
Efficacy	147 lm/W
Peak intensity	3,792 cd, 860 cd/klm
Beam angle (50%)	60°
Field angle (10%)	109.4°
Cut-off angle (2.5%)	69°
Flux 0–30° / 30–60° / 60–90°	52.4 / 42.6 / 5 %
Size	165 × 85 mm
Data	Calculated from catalogue data

DiaNoche
service@dianoche.it
dianoche.it

Technical data may change without notice.