Track spotlights

S3-4252

Track spotlight

Track spotlight. 10 W. 15° or 60° beam. 3000, 4000 K. 97 CRI.

- LED source: Citizen

Power **10 W**	Luminous flux **1000–1100 lm**	Colour temperature **3000 K, 4000 K**
CRI **97 CRI**	Beam angles **15°, 60°**	IP rating **IP20**
Certifications **CE, RoHS, EMC, LVD**	Mounting **Magnetic track**	Control **DALI, 0-10V, Triac, Casambi**
Finishes **White, Black, Grey**		

Dimensions

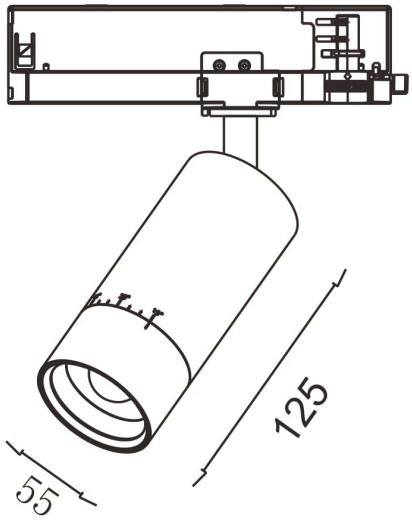

Models

Code	Power	Flux	CRI	Size	Beam
S3-4252	10 W	1000–1100 lm	97 CRI	55 × 125 mm	15° 60°

Photometric data

Illuminance on the beam axis (lx) and beam diameter at each mounting distance, per model and beam angle. IES files for every model and beam can be downloaded from the product page.

10 W

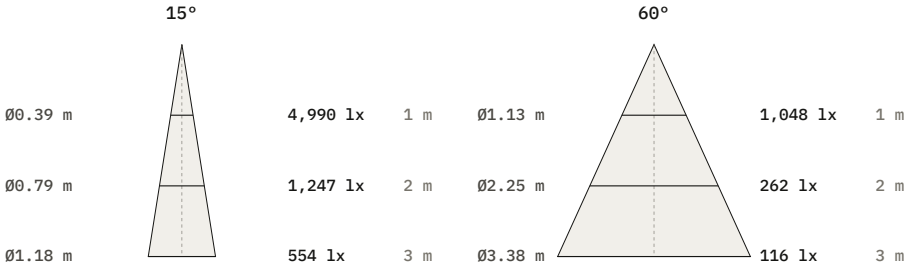

Beam	1 m	2 m	3 m
15°	4,990 lx Ø390 mm	1,247 lx Ø790 mm	554 lx Ø1180 mm
60°	1,048 lx Ø1130 mm	262 lx Ø2250 mm	116 lx Ø3380 mm

Photometry

Polar curve, on-axis illuminance with beam diameter at 1–5 m, and key figures for S3-4252, from the same data as the IES and LDT files on the product page. Calculated from catalogue data, not measured with a goniophotometer. Other models with the same beam share this distribution, scaled to their luminous flux.

S3-4252, 10 W, 15° beam

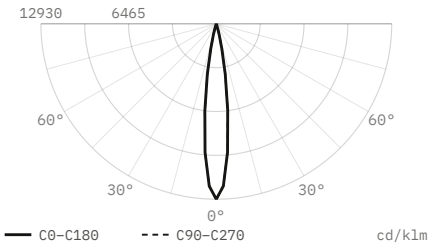

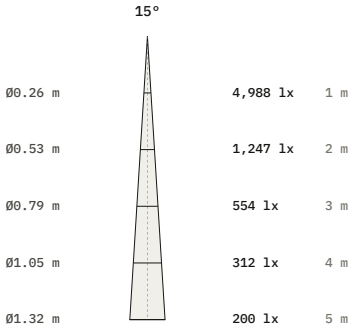

Luminous flux	386 lm
Efficacy	39 lm/W
Peak intensity	4,988 cd, 12,930 cd/klm
Beam angle (50%)	15°
Field angle (10%)	27.3°
Cut-off angle (2.5%)	17°
Flux 0–30° / 30–60° / 60–90°	100 / 0 / 0 %
Size	125 × 55 mm
Data	Calculated from catalogue data

S3-4252, 10 W, 60° beam

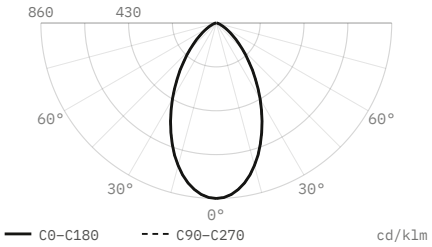

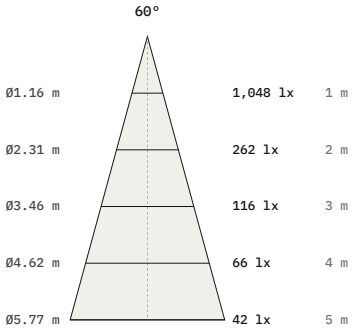

Luminous flux	1,218 lm
Efficacy	122 lm/W
Peak intensity	1,048 cd, 860 cd/klm
Beam angle (50%)	60°
Field angle (10%)	109.4°
Cut-off angle (2.5%)	69°
Flux 0–30° / 30–60° / 60–90°	52.4 / 42.6 / 5 %
Size	125 × 55 mm
Data	Calculated from catalogue data

DiaNoche
service@dianoche.it
dianoche.it

Technical data may change without notice.