Recessed

Royce DL1441

Recessed spotlight

Recessed spotlight. 7 W. 10° beam. 2700, 3000, 4000 K. 97 CRI.

- Ceiling cut-out Ø45 mm
- LED source: Citizen

Power **7 W**	Voltage **max 12 V**	Luminous flux **100 lm**
Colour temperature **2700 K, 3000 K, 4000 K**	CRI **97 CRI**	Beam angles **10°**
IP rating **IP20**	Certifications **CE**	Mounting **Recessed**
Finishes **White**		

Dimensions

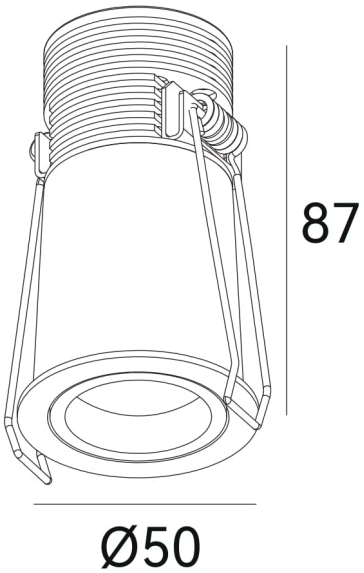

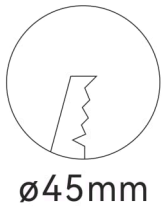

Models

Code	Power	Voltage	Flux	CRI	Size	Cut-out	Beam	Notes
DL1441	7 W	max 12 V	100 lm	97 CRI	Ø50 x H87 mm	Ø45 mm	10°	600 mA

Photometry

Polar curve, on-axis illuminance with beam diameter at 1–5 m, and key figures for DL1441, from the same data as the IES and LDT files on the product page. Calculated from catalogue data, not measured with a goniophotometer. Other models with the same beam share this distribution, scaled to their luminous flux.

DL1441, 7 W, 10° beam

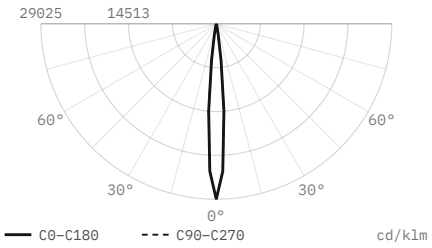

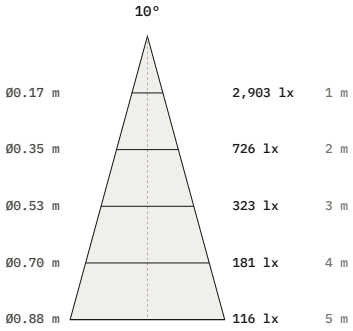

Luminous flux	100 lm
Efficacy	14 lm/W
Peak intensity	2,903 cd, 29,025 cd/klm
Beam angle (50%)	10°
Field angle (10%)	18.2°
Cut-off angle (2.5%)	11.5°
Flux 0–30° / 30–60° / 60–90°	100 / 0 / 0 %
Size	Ø50 × 87 mm
Data	Calculated from catalogue data

DiaNoche
service@dianoche.it
dianoche.it

Technical data may change without notice.