Recessed

Robo DL1915

Recessed spotlight

Recessed spotlight. 7 W. Four beam angles, 15° to 50°. 2700, 3000, 4000 K. 97 CRI.

- Ceiling cut-out Ø35 / Ø68 mm
- LED source: Citizen

Power **7 W**	Voltage **max 18 V**	Luminous flux **630 lm**
Colour temperature **2700 K, 3000 K, 4000 K**	CRI **97 CRI**	Beam angles **15°, 24°, 36°, 50°**
IP rating **IP20**	Certifications **CE**	Mounting **Recessed**
Finishes **White**		

Dimensions

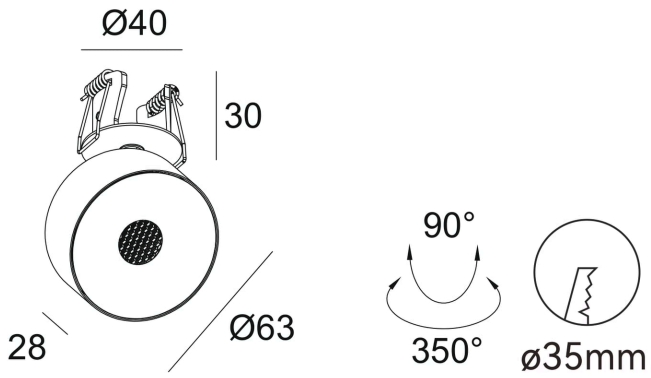

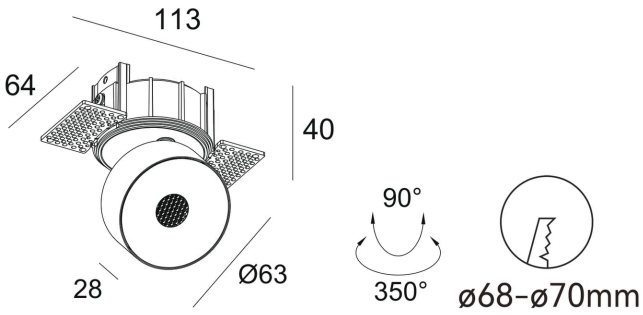

Models

Code	Power	Voltage	Flux	CRI	Size	Cut-out	Beam	Notes
DL1915	7 W	max 18 V	630 lm	97 CRI	Head Ø63 × 28 mm; recessed body Ø40 x H30 mm	Ø35 mm	15° 24° 36° 50°	350 mA
DL1916	7 W	max 18 V	630 lm	97 CRI	Head Ø63 × 28 mm; plaster-in frame 113 × 64, body H40 mm	Ø68 mm	15° 24° 36° 50°	350 mA

Photometry

Polar curve, on-axis illuminance with beam diameter at 1–5 m, and key figures for DL1915, from the same data as the IES and LDT files on the product page. Calculated from catalogue data, not measured with a goniophotometer. Other models with the same beam share this distribution, scaled to their luminous flux.

DL1915, 7 W, 15° beam

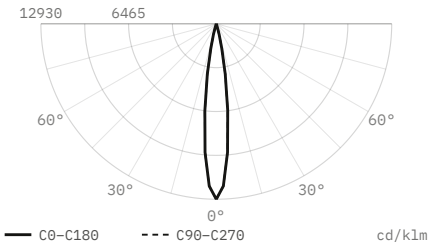

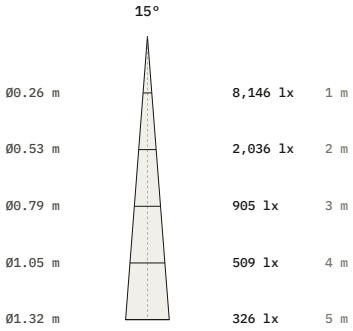

Luminous flux	630 lm
Efficacy	90 lm/W
Peak intensity	8,146 cd, 12,930 cd/klm
Beam angle (50%)	15°
Field angle (10%)	27.3°
Cut-off angle (2.5%)	17°
Flux 0–30° / 30–60° / 60–90°	100 / 0 / 0 %
Size	Ø63 × 28 mm
Data	Calculated from catalogue data

DL1915, 7 W, 24° beam

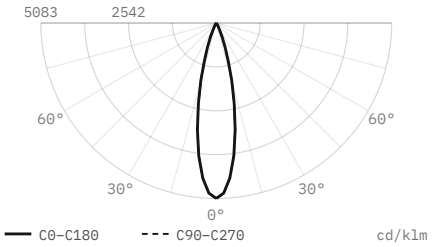

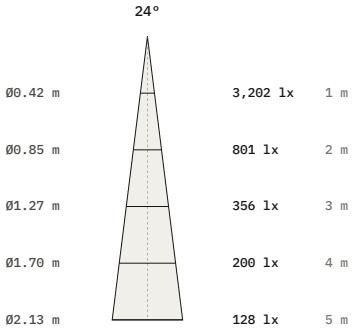

Luminous flux	630 lm
Efficacy	90 lm/W
Peak intensity	3,202 cd, 5,083 cd/klm
Beam angle (50%)	24°
Field angle (10%)	43.7°
Cut-off angle (2.5%)	27.5°
Flux 0–30° / 30–60° / 60–90°	98.7 / 1.3 / 0 %
Size	Ø63 × 28 mm
Data	Calculated from catalogue data

DL1915, 7 W, 36° beam

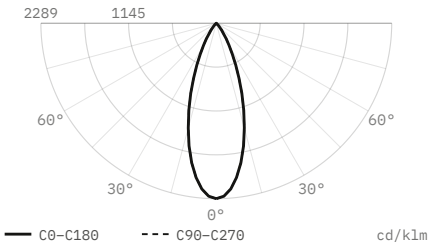

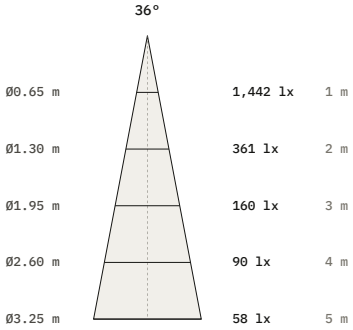

Luminous flux	630 lm
Efficacy	90 lm/W
Peak intensity	1,442 cd, 2,289 cd/klm
Beam angle (50%)	36°
Field angle (10%)	65.6°
Cut-off angle (2.5%)	41.5°
Flux 0–30° / 30–60° / 60–90°	86.1 / 13.9 / 0 %
Size	Ø63 × 28 mm
Data	Calculated from catalogue data

DL1915, 7 W, 50° beam

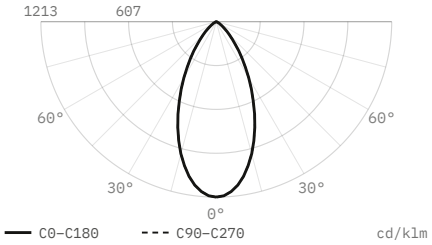

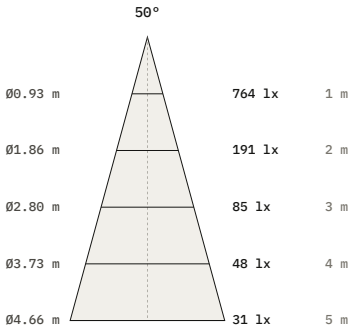

Luminous flux	630 lm
Efficacy	90 lm/W
Peak intensity	764 cd, 1,213 cd/klm
Beam angle (50%)	50°
Field angle (10%)	91.1°
Cut-off angle (2.5%)	57.5°
Flux 0–30° / 30–60° / 60–90°	64.8 / 33.6 / 1.5 %
Size	Ø63 × 28 mm
Data	Calculated from catalogue data

DiaNoche
service@dianoche.it
dianoche.it

Technical data may change without notice.