Recessed

Robo DL0557

Recessed spotlight

Recessed spotlight. 7 W. 35° or 50° beam. 2700, 3000, 4000 K. 97 CRI.

- Ceiling cut-out Ø83 mm
- LED source: Citizen

Power **7 W**	Voltage **max 19 V**	Luminous flux **595 lm**
Colour temperature **2700 K, 3000 K, 4000 K**	CRI **97 CRI**	Beam angles **35°, 50°**
IP rating **IP20**	Certifications **CE**	Mounting **Recessed**
Finishes **White**		

Dimensions

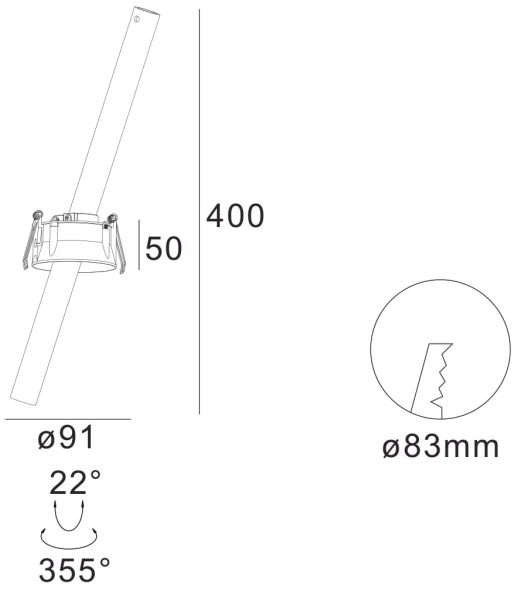

Models

Code	Power	Voltage	Flux	CRI	Cut-out	Beam	Notes
DL0557	7 W	max 19 V	595 lm	97 CRI	Ø83 mm	35° 50°	350 mA

Photometry

Polar curve, on-axis illuminance with beam diameter at 1–5 m, and key figures for DL0557, from the same data as the IES and LDT files on the product page. Calculated from catalogue data, not measured with a goniophotometer. Other models with the same beam share this distribution, scaled to their luminous flux.

DL0557, 7 W, 35° beam

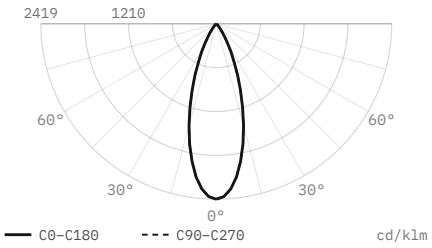

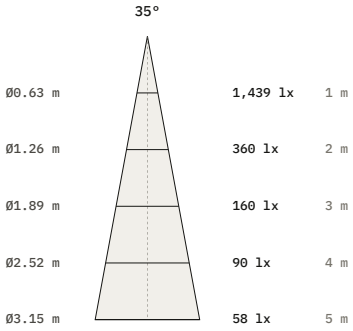

Luminous flux	595 lm
Efficacy	85 lm/W
Peak intensity	1,439 cd, 2,419 cd/klm
Beam angle (50%)	35°
Field angle (10%)	63.8°
Cut-off angle (2.5%)	40°
Flux 0–30° / 30–60° / 60–90°	87.6 / 12.4 / 0 %
Data	Calculated from catalogue data

DL0557, 7 W, 50° beam

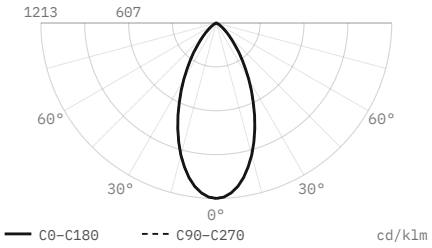

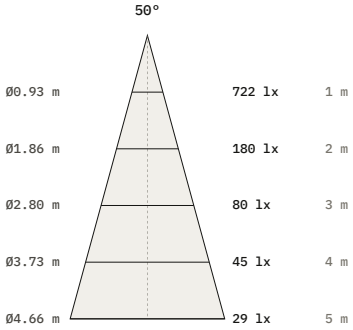

Luminous flux	595 lm
Efficacy	85 lm/W
Peak intensity	722 cd, 1,213 cd/klm
Beam angle (50%)	50°
Field angle (10%)	91.1°
Cut-off angle (2.5%)	57.5°
Flux 0–30° / 30–60° / 60–90°	64.8 / 33.6 / 1.5 %
Data	Calculated from catalogue data

DiaNoche
service@dianoche.it
dianoche.it

Technical data may change without notice.