Wall

Oval Indoor WL0083

Wall light

Wall light. 3 W. 2700, 3000, 4000 K. 97 CRI.

- LED source: Citizen

Power **3 W**	Voltage **230 V AC**	Luminous flux **420 lm**
Colour temperature **2700 K, 3000 K, 4000 K**	CRI **97 CRI**	IP rating **IP20**
Certifications **CE**	Mounting **Surface, Wall**	

Dimensions

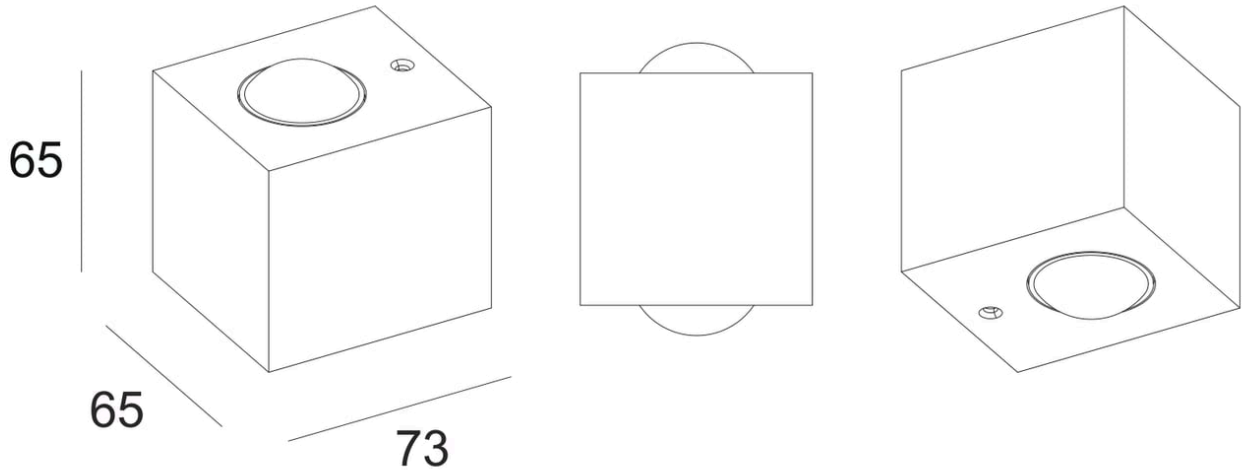

Models

Code	Power	Voltage	Flux	CRI	Size
WL0083	3 W	230 V AC	420 lm	97 CRI	65 × 65 × 73 mm

Photometry

Polar curve, on-axis illuminance with beam diameter at 1–5 m, and key figures for WL0083, from the same data as the IES and LDT files on the product page. Calculated from catalogue data, not measured with a goniophotometer. Other models with the same beam share this distribution, scaled to their luminous flux.

WL0083, 3 W, wide distribution

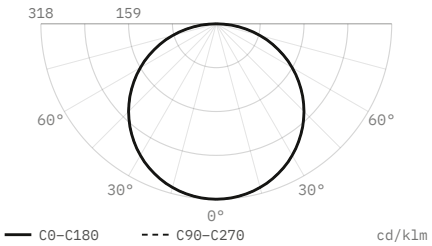

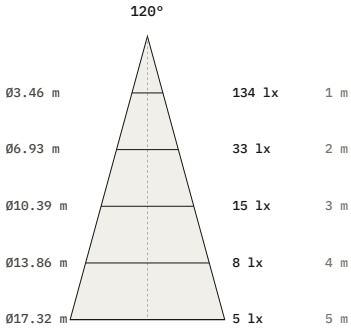

Luminous flux	420 lm
Efficacy	140 lm/W
Peak intensity	134 cd, 318 cd/klm
Beam angle (50%)	120°
Field angle (10%)	168.5°
Cut-off angle (2.5%)	88.5°
Flux 0–30° / 30–60° / 60–90°	25 / 50 / 25 %
Size	65 × 65 × 73 mm
Data	Calculated from catalogue data

DiaNoche
service@dianoche.it
dianoche.it

Technical data may change without notice.