Moon system

Moon Sphere M-P04+C150B

Moon surface luminaire

Surface luminaire from the Moon range. 6 W. 120° beam. 3000 K. 97 CRI.

- LED source: Citizen

Power **6 W**	Voltage **48 V DC**	Colour temperature **3000 K**
CRI **97 CRI**	Beam angles **120°**	IP rating **IP20**
Mounting **Recessed, Surface**	Control **On/Off, Triac**	Finishes **Black**

Dimensions

M-P04+C150B

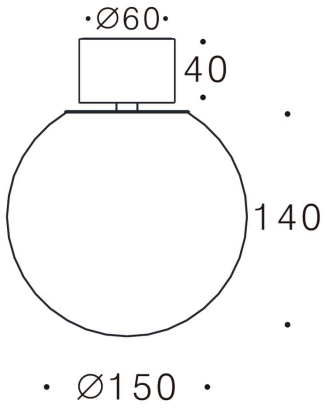

Models

Code	Version	Power	Voltage	CRI	Size	Beam	Notes
M-P04+C150B	Ø150 mm	6 W	48 V DC	97 CRI	Ø150 × 140 mm (sphere); canopy Ø60 × 40 mm	120°	LED 36 V, 150 mA

Photometry

Polar curve, on-axis illuminance with beam diameter at 1–5 m, and key figures for M-P04+C150B, from the same data as the IES and LDT files on the product page. Estimated from catalogue data, not measured with a goniophotometer. Other models with the same beam share this distribution, scaled to their luminous flux.

M-P04+C150B, 6 W, 120° beam

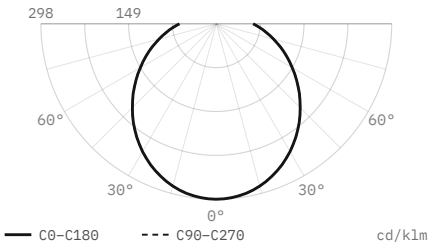

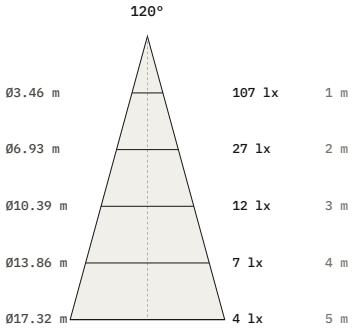

Luminous flux	360 lm
Efficacy	60 lm/W
Peak intensity	107 cd, 298 cd/klm
Beam angle (50%)	120°
Cut-off angle (2.5%)	90°
Flux 0–30° / 30–60° / 60–90°	23 / 45.1 / 31.8 %
Size	Ø150 × 140 mm
Data	Estimated from catalogue data

DiaNoche
service@dianoche.it
dianoche.it

Technical data may change without notice.