Moon system

Moon Line M-11R-280

Moon linear luminaire

Linear luminaire for the Moon magnetic track. 12 W. 3000, 4000 K. 97 CRI.

- LED source: Citizen

Power **12 W**	Voltage **48 V DC**	Colour temperature **3000 K, 4000 K**
CRI **97 CRI**	IP rating **IP20**	Mounting **Magnetic track**
Control **On/Off, Triac**	Finishes **Black**	

Dimensions

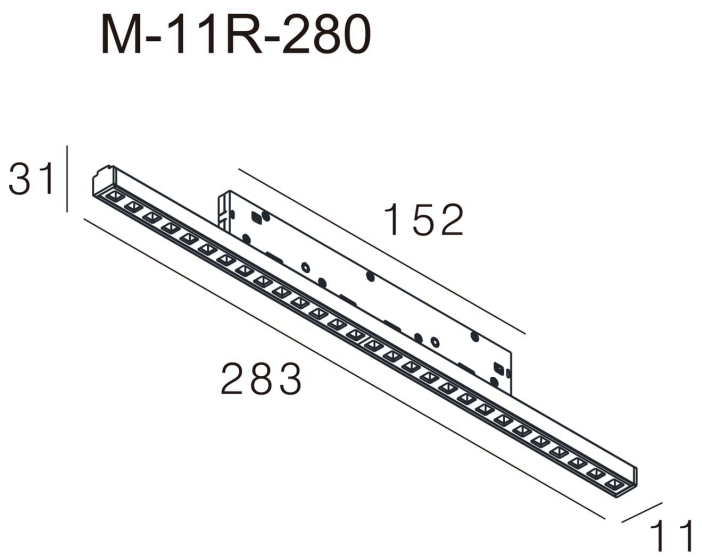

Models

Code	Power	Voltage	CRI	Size	Notes
M-11R-280			97 CRI		
M-11R-280	12 W	48 V DC	97 CRI	L283 x W11 x H31 mm	LED 36 V, 250 mA

Photometry

Polar curve, on-axis illuminance with beam diameter at 1–5 m, and key figures for M-11R-280, from the same data as the IES and LDT files on the product page. Estimated from catalogue data, not measured with a goniophotometer. Other models with the same beam share this distribution, scaled to their luminous flux.

M-11R-280, 12 W, wide distribution

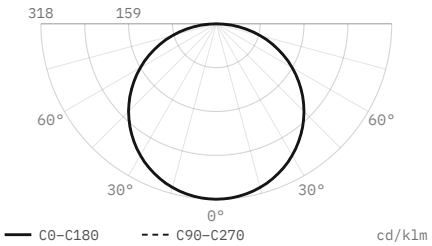

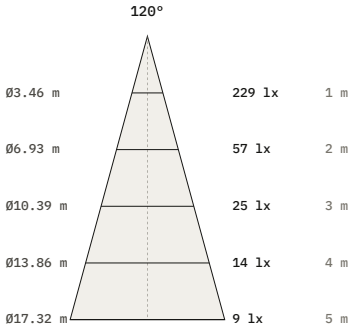

Luminous flux	**720 lm**
Efficacy	**60 lm/W**
Peak intensity	**229 cd, 318 cd/klm**
Beam angle (50%)	**120°**
Field angle (10%)	**168.5°**
Cut-off angle (2.5%)	**88.5°**
Flux 0–30° / 30–60° / 60–90°	**25 / 50 / 25 %**
Size	**283 × 11 × 31 mm**
Data	**Estimated from catalogue data**

DiaNoche
service@dianoche.it
dianoche.it

Technical data may change without notice.