Recessed

Grill DL1321

Recessed spotlight

Recessed spotlight. 52 W. Four beam angles, 15° to 60°. 2700, 3000, 4000 K. 97 CRI.

- Ceiling cut-out Ø185 mm
- LED source: Citizen

Power **52 W**	Voltage **2 × max 37 V**	Luminous flux **2 × 2600 lm**
Colour temperature **2700 K, 3000 K, 4000 K**	CRI **97 CRI**	Beam angles **15°, 24°, 36°, 60°**
IP rating **IP20**	Certifications **CE**	Mounting **Recessed**
Finishes **Black**		

Dimensions

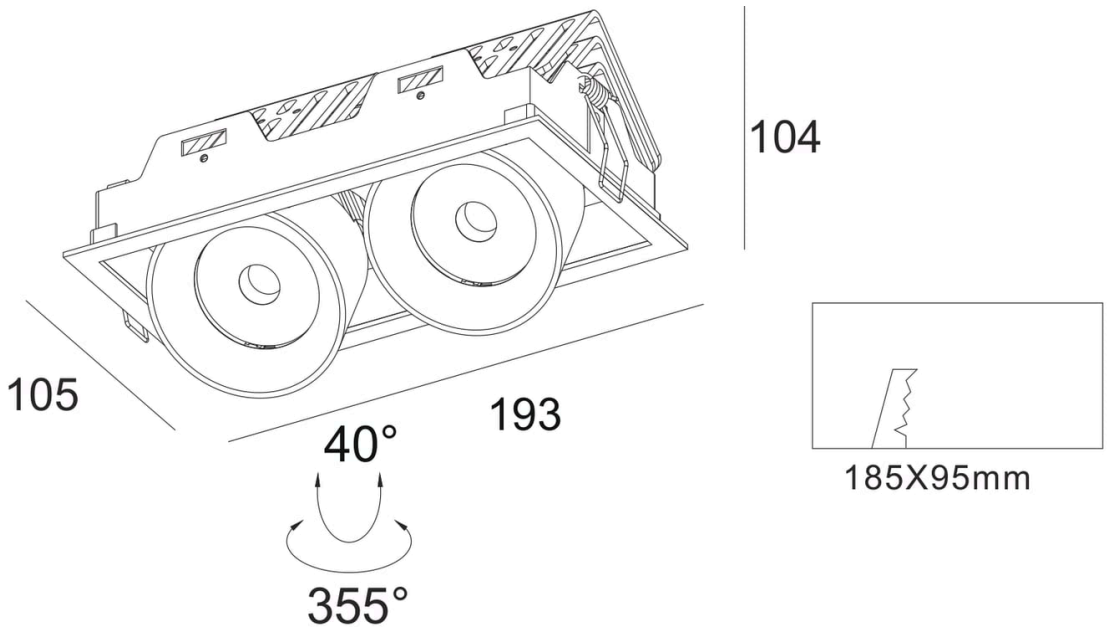

Models

Code	Version	Power	Voltage	Flux	CRI	Size	Cut-out	Beam	Notes
DL1321	2 heads	52 W	2 × max 37 V	2 × 2600 lm	97 CRI	105 × 193 x H104 mm	Ø185 mm	15° 24° 36° 60°	700 mA

Photometry

Polar curve, on-axis illuminance with beam diameter at 1–5 m, and key figures for DL1321, from the same data as the IES and LDT files on the product page. Calculated from catalogue data, not measured with a goniophotometer. Other models with the same beam share this distribution, scaled to their luminous flux.

DL1321, 52 W, 15° beam

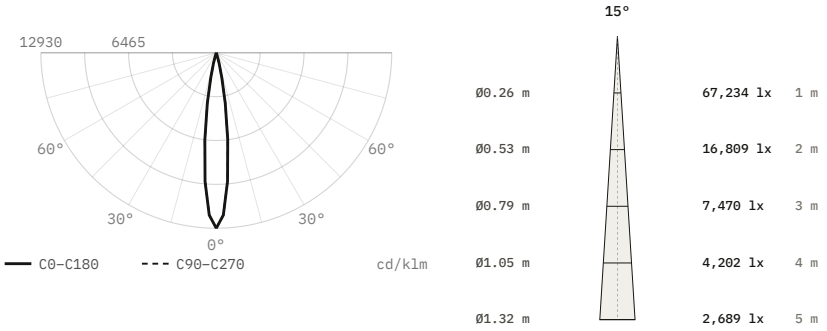

Luminous flux	5,200 lm
Efficacy	100 lm/W
Peak intensity	67,234 cd, 12,930 cd/klm
Beam angle (50%)	15°
Field angle (10%)	27.3°
Cut-off angle (2.5%)	17°
Flux 0–30° / 30–60° / 60–90°	100 / 0 / 0 %
Size	193 × 105 × 104 mm
Data	Calculated from catalogue data

DL1321, 52 W, 24° beam

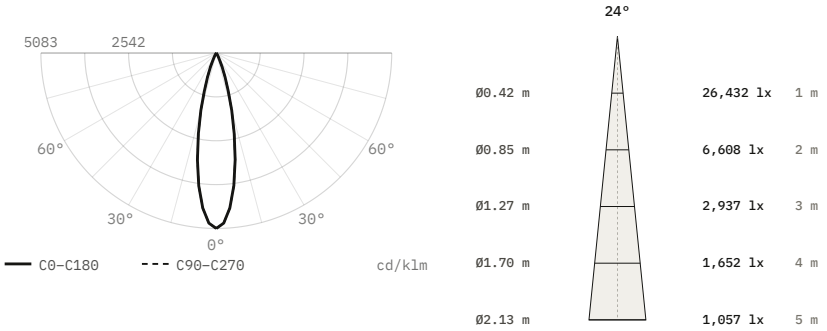

Luminous flux	5,200 lm
Efficacy	100 lm/W
Peak intensity	26,432 cd, 5,083 cd/klm
Beam angle (50%)	24°
Field angle (10%)	43.7°
Cut-off angle (2.5%)	27.5°
Flux 0–30° / 30–60° / 60–90°	98.7 / 1.3 / 0 %
Size	193 × 105 × 104 mm
Data	Calculated from catalogue data

DL1321, 52 W, 36° beam

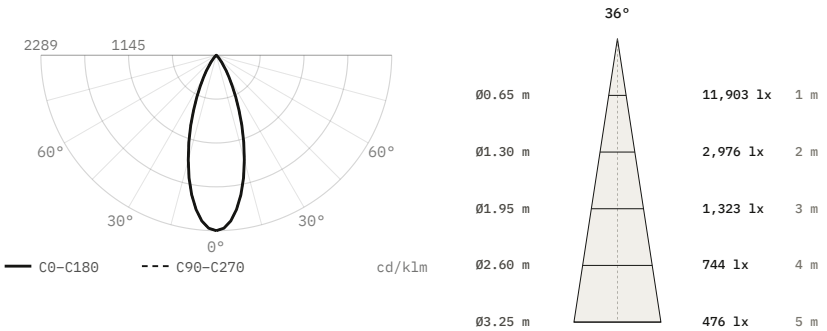

Luminous flux	5,200 lm
Efficacy	100 lm/W
Peak intensity	11,903 cd, 2,289 cd/klm
Beam angle (50%)	36°
Field angle (10%)	65.6°
Cut-off angle (2.5%)	41.5°
Flux 0–30° / 30–60° / 60–90°	86.1 / 13.9 / 0 %
Size	193 × 105 × 104 mm
Data	Calculated from catalogue data

DL1321, 52 W, 60° beam

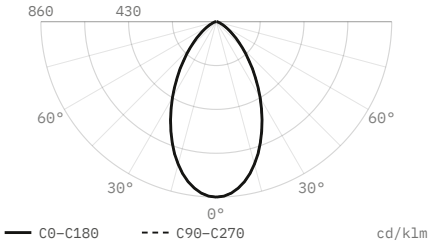

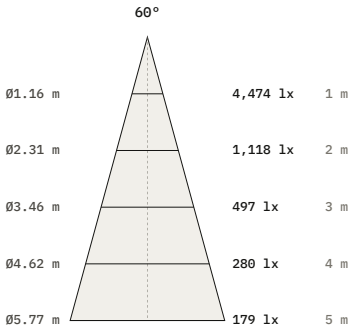

Luminous flux	5,200 lm
Efficacy	100 lm/W
Peak intensity	4,474 cd, 860 cd/klm
Beam angle (50%)	60°
Field angle (10%)	109.4°
Cut-off angle (2.5%)	69°
Flux 0–30° / 30–60° / 60–90°	52.4 / 42.6 / 5 %
Size	193 × 105 × 104 mm
Data	Calculated from catalogue data

DiaNoche
service@dianoche.it
dianoche.it

Technical data may change without notice.