Track spotlights

Gobo 4837 R3-4837

Track spotlight

Track spotlight. 30 W. 6500 K. 97 CRI.

- Ceiling cut-out Ø70 mm
- LED source: Citizen

Power **30 W**	Luminous flux **2800–2900 lm**	Colour temperature **6500 K**
CRI **97 CRI**	IP rating **IP20**	Certifications **CE, RoHS, EMC, LVD**
Mounting **Recessed, Surface, Magnetic track**	Control **DALI, 0-10V, Triac**	Finishes **White, Black**

Dimensions

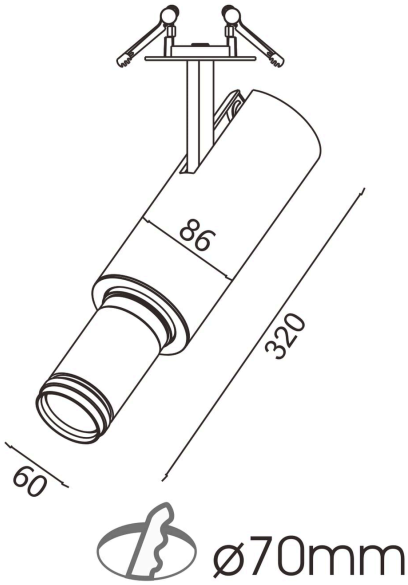

Models

Code	Version	Power	Flux	CRI	Size	Cut-out
R3-4837	Recessed	30 W	2800–2900 lm	97 CRI	86 × 320 mm (60 at lens end)	Ø70 mm

Photometry

Polar curve, on-axis illuminance with beam diameter at 1–5 m, and key figures for R3-4837, from the same data as the IES and LDT files on the product page. Calculated from catalogue data, not measured with a goniophotometer. Other models with the same beam share this distribution, scaled to their luminous flux.

R3-4837, 30 W, wide distribution

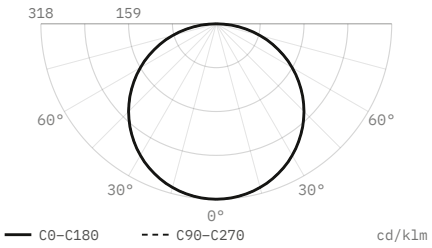

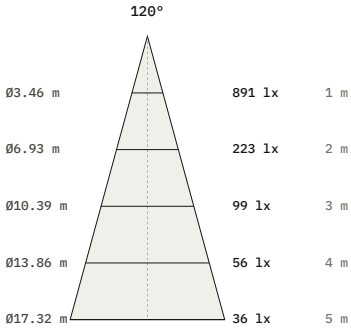

Luminous flux	2,800 lm
Efficacy	93 lm/W
Peak intensity	891 cd, 318 cd/klm
Beam angle (50%)	120°
Field angle (10%)	168.5°
Cut-off angle (2.5%)	88.5°
Flux 0–30° / 30–60° / 60–90°	25 / 50 / 25 %
Size	320 × 86 mm
Data	Calculated from catalogue data

DiaNoche
service@dianoche.it
dianoche.it

Technical data may change without notice.