Recessed

D3-4228-TRF

Recessed spotlight

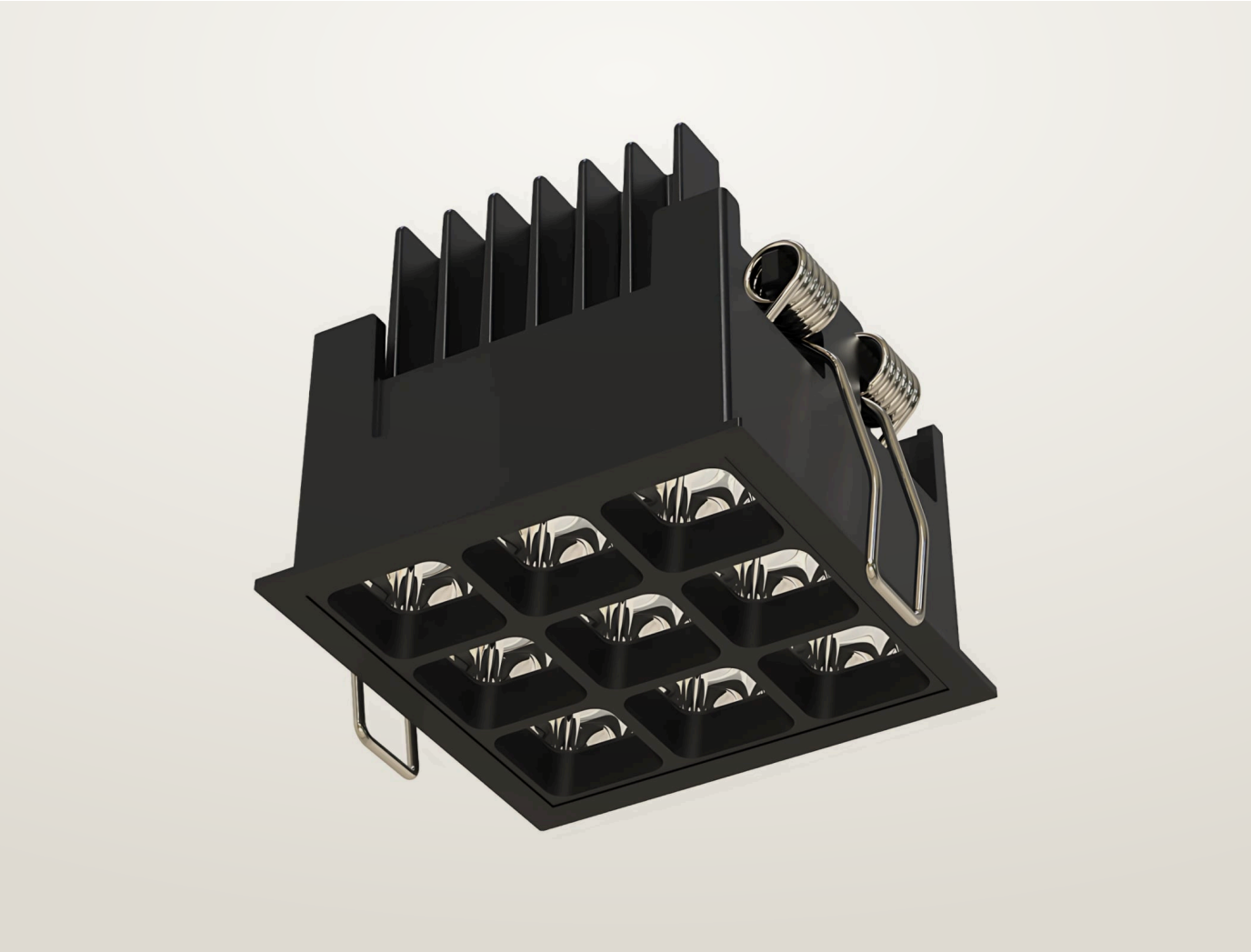

Recessed spotlight. 18 W. 50° beam. 3000, 4000 K. 97 CRI.

- Ceiling cut-out Ø65 mm
- LED source: Citizen

Power **18 W**	Luminous flux **1300–1400 lm**	Colour temperature **3000 K, 4000 K**
CRI **97 CRI**	Beam angles **50°**	IP rating **IP20**
Certifications **CE, RoHS, EMC, LVD**	Mounting **Recessed**	Control **DALI, 0-10V, Triac, Casambi**
Finishes **White, Black, Grey**		

Dimensions

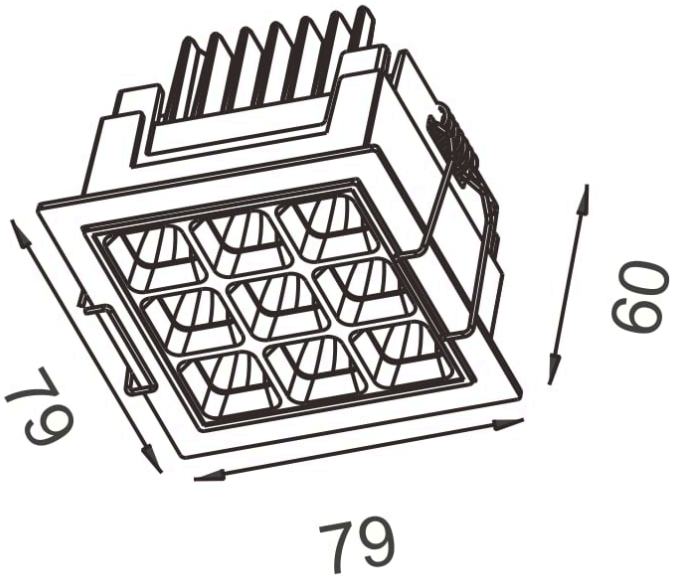

Models

Code	Version	Power	Flux	CRI	Size	Cut-out	Beam
D3-4228-TRF	Trim fixed (TRF)	18 W	1300–1400 lm	97 CRI	L79 x W79 x H60 mm	Ø65 mm	50°

Photometric data

Illuminance on the beam axis (lx) and beam diameter at each mounting distance, per model and beam angle. IES files for every model and beam can be downloaded from the product page.

18 W

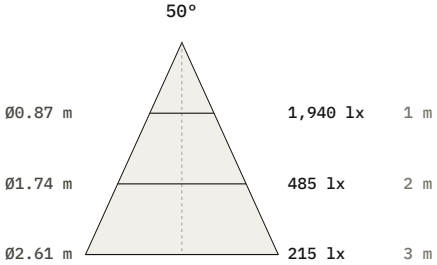

Beam	1 m	2 m	3 m
50°	1,940 lx Ø870 mm	485 lx Ø1740 mm	215 lx Ø2610 mm

Photometry

Polar curve, on-axis illuminance with beam diameter at 1–5 m, and key figures for D3-4228-TRF, from the same data as the IES and LDT files on the product page. Calculated from catalogue data, not measured with a goniophotometer. Other models with the same beam share this distribution, scaled to their luminous flux.

D3-4228-TRF, 18 W, 50° beam

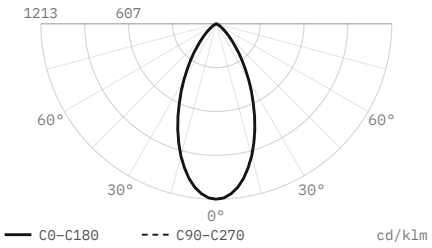

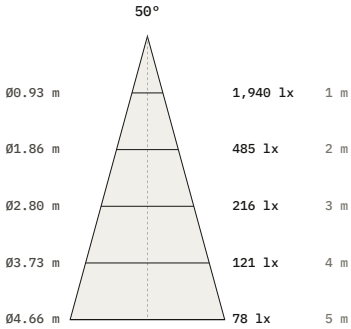

Luminous flux	1,599 lm
Efficacy	89 lm/W
Peak intensity	1,940 cd, 1,213 cd/klm
Beam angle (50%)	50°
Field angle (10%)	91.1°
Cut-off angle (2.5%)	57.5°
Flux 0–30° / 30–60° / 60–90°	64.8 / 33.6 / 1.5 %
Size	79 × 79 × 60 mm
Data	Calculated from catalogue data

DiaNoche
service@dianoche.it
dianoche.it

Technical data may change without notice.