Magnetic 23 mm system

Zoom Spotlight CX-8139

23 mm spotlight

Spotlight for the 23 mm magnetic track. 15 W. 2700, 3000, 4000 K. 97 CRI.

- LED source: Citizen
- UGR <19

Power **15 W**	Voltage **48 V**	Luminous flux **1350 lm**
Colour temperature **2700 K, 3000 K, 4000 K**	CRI **97 CRI**	IP rating **IP20**
Certifications **CE, RoHS**	Mounting **Magnetic track**	Control **DALI, 0-10V, Bluetooth, Casambi**
Finishes **White, Black, Grey**		

Dimensions

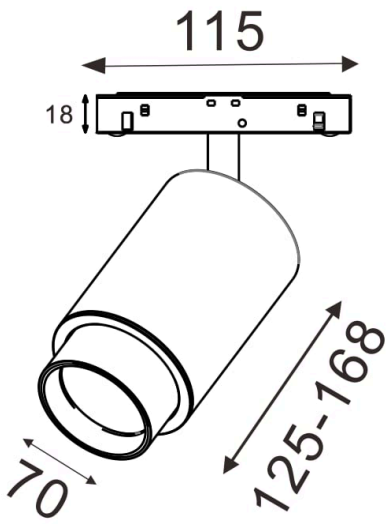

Models

Code	Version	Power	Voltage	Flux	CRI	Size
CX-8139	Short arm, 6–60°	15 W	48 V	1350 lm	97 CRI	70 × 125–168 mm
CX-9139	Long arm, 6–60°	15 W	48 V	1350 lm	97 CRI	70 × 125–168 mm

Finishes

Black

Grey

Photometry

Polar curve, on-axis illuminance with beam diameter at 1–5 m, and key figures for CX-8139, from the same data as the IES and LDT files on the product page. Calculated from catalogue data, not measured with a goniophotometer. Other models with the same beam share this distribution, scaled to their luminous flux.

CX-8139, 15 W, wide distribution

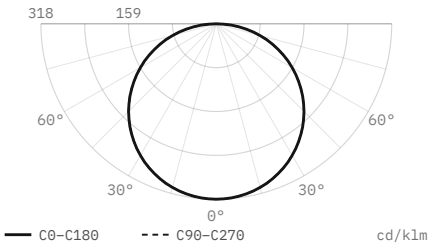

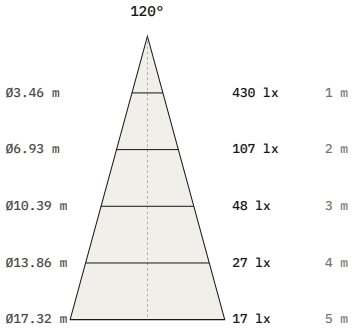

Luminous flux	1,350 lm
Efficacy	90 lm/W
Peak intensity	430 cd, 318 cd/klm
Beam angle (50%)	120°
Field angle (10%)	168.5°
Cut-off angle (2.5%)	88.5°
Flux 0–30° / 30–60° / 60–90°	25 / 50 / 25 %
Size	125 × 70 × 168 mm
Data	Calculated from catalogue data

DiaNoche
service@dianoche.it
dianoche.it

Technical data may change without notice.