Recessed

COSMOS-1202R

Recessed spotlight

Recessed spotlight. 10 W. 24° or 36° beam. 3000, 4000 K. IP20/44/65. 97 CRI.

- LED source: Citizen
- UGR <6 (20°), <7 (24°), <12 (36°)

Power **10 W**	Voltage **36 V**	Colour temperature **3000 K, 4000 K**
CRI **97 CRI**	Beam angles **24°, 36°**	IP rating **IP20/44/65**
Mounting **Recessed**	Control **On/Off, Triac**	Finishes **White, Black, Silver, Brass, Bronze, Gun black**

Dimensions

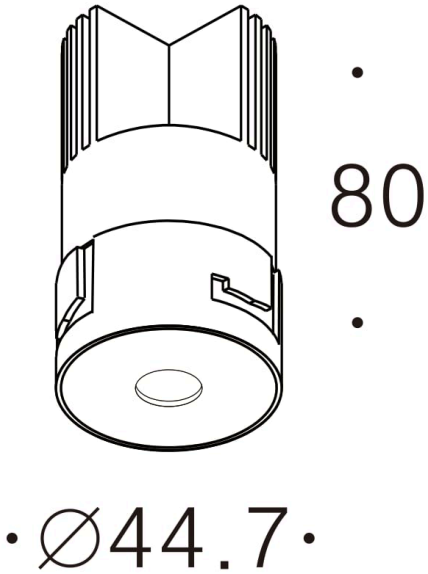

Models

Code	Version	Power	Voltage	CRI	Size	Beam	Notes
COSMOS-1202R	On/Off	10 W	36 V	97 CRI	Ø44.7 x H80 mm	24° 36°	250 mA
COSMOS-1202R	Triac / DALI DT6	10 W	36 V	97 CRI	Ø44.7 x H80 mm	24° 36°	250 mA
COSMOS-1202R	DALI DT8 tunable white	10 W	36 V	97 CRI	Ø44.7 x H80 mm	24° 36°	250 mA

Photometry

Polar curve, on-axis illuminance with beam diameter at 1–5 m, and key figures for COSMOS-1202R, from the same data as the IES and LDT files on the product page. Estimated from catalogue data, not measured with a goniophotometer. Other models with the same beam share this distribution, scaled to their luminous flux.

COSMOS-1202R, 10 W, 24° beam

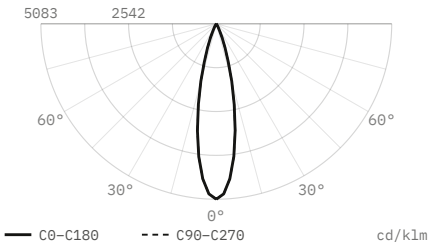

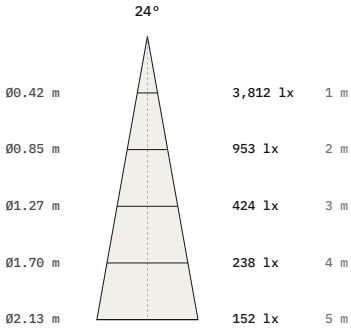

Luminous flux	750 lm
Efficacy	75 lm/W
Peak intensity	3,812 cd, 5,083 cd/klm
Beam angle (50%)	24°
Field angle (10%)	43.7°
Cut-off angle (2.5%)	27.5°
Flux 0–30° / 30–60° / 60–90°	98.7 / 1.3 / 0 %
Size	Ø44.7 × 80 mm
Data	Estimated from catalogue data

COSMOS-1202R, 10 W, 36° beam

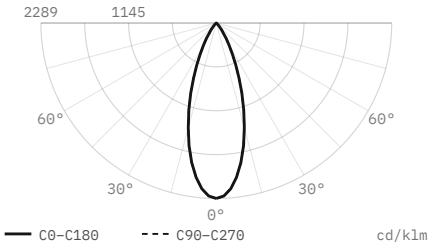

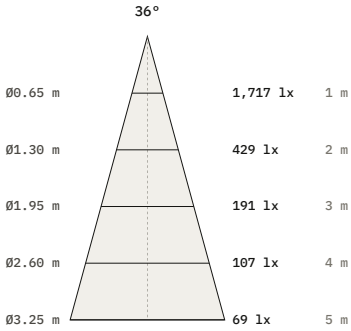

Luminous flux	750 lm
Efficacy	75 lm/W
Peak intensity	1,717 cd, 2,289 cd/klm
Beam angle (50%)	36°
Field angle (10%)	65.6°
Cut-off angle (2.5%)	41.5°
Flux 0–30° / 30–60° / 60–90°	86.1 / 13.9 / 0 %
Size	Ø44.7 × 80 mm
Data	Estimated from catalogue data

DiaNoche
service@dianoche.it
dianoche.it

Technical data may change without notice.