Recessed

COSMOS-0802R-1-4G

Recessed spotlight

Recessed spotlight. 8 W. 24° or 36° beam. 3000, 4000 K. 97 CRI.

- LED source: Citizen
- UGR <6 (20°), <7 (24°), <12 (36°)

Power **8 W**	Voltage **36 V**	Colour temperature **3000 K, 4000 K**
CRI **97 CRI**	Beam angles **24°, 36°**	IP rating **IP20**
Mounting **Recessed**	Control **On/Off, Triac**	Finishes **White, Black, Silver, Brass, Bronze, Gun black**

Dimensions

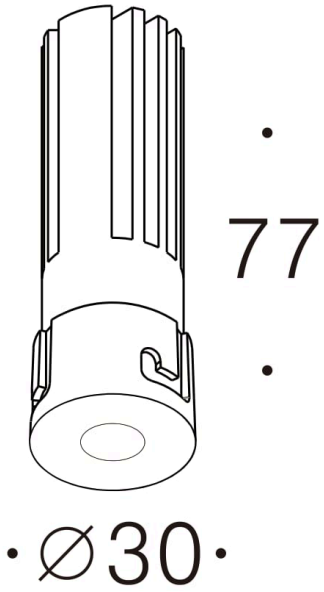

Models

Code	Power	Voltage	CRI	Size	Beam	Notes
COSMOS-0802R-1-4G	8 W	36 V	97 CRI	Ø30 x H77 mm	24° 36°	200 mA

Photometry

Polar curve, on-axis illuminance with beam diameter at 1–5 m, and key figures for COSMOS-0802R-1-4G, from the same data as the IES and LDT files on the product page. Estimated from catalogue data, not measured with a goniophotometer. Other models with the same beam share this distribution, scaled to their luminous flux.

COSMOS-0802R-1-4G, 8 W, 24° beam

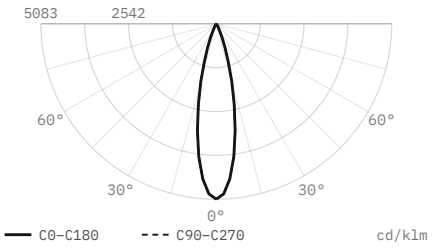

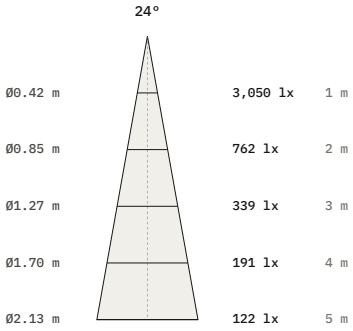

Luminous flux	600 lm
Efficacy	75 lm/W
Peak intensity	3,050 cd, 5,083 cd/klm
Beam angle (50%)	24°
Field angle (10%)	43.7°
Cut-off angle (2.5%)	27.5°
Flux 0–30° / 30–60° / 60–90°	98.7 / 1.3 / 0 %
Size	Ø30 × 77 mm
Data	Estimated from catalogue data

COSMOS-0802R-1-4G, 8 W, 36° beam

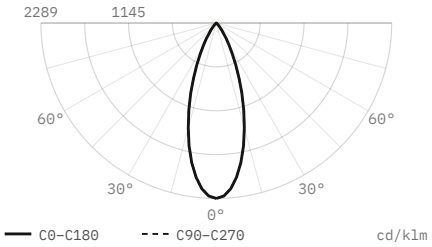

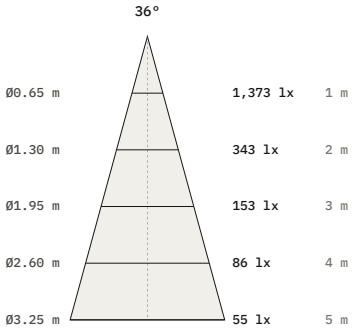

Luminous flux	600 lm
Efficacy	75 lm/W
Peak intensity	1,373 cd, 2,289 cd/klm
Beam angle (50%)	36°
Field angle (10%)	65.6°
Cut-off angle (2.5%)	41.5°
Flux 0–30° / 30–60° / 60–90°	86.1 / 13.9 / 0 %
Size	Ø30 × 77 mm
Data	Estimated from catalogue data

DiaNoche
service@dianoche.it
dianoche.it

Technical data may change without notice.