Superslim 5 mm system

Cone Pendant CL-B

Superslim 5 mm pendant

Pendant for the Superslim 5 mm magnetic track. 4 W. 50° beam. 2700, 3000, 4000, 5000 K. 97 CRI.

- LED source: Citizen

Power **4 W**	Voltage **48 V DC**	Colour temperature **2700 K, 3000 K, 4000 K, 5000 K**
CRI **97 CRI**	Beam angles **50°**	Mounting **Magnetic track**
Control **Casambi, Tuya, DALI, 0-10V**	Finishes **White, Black**	

Dimensions

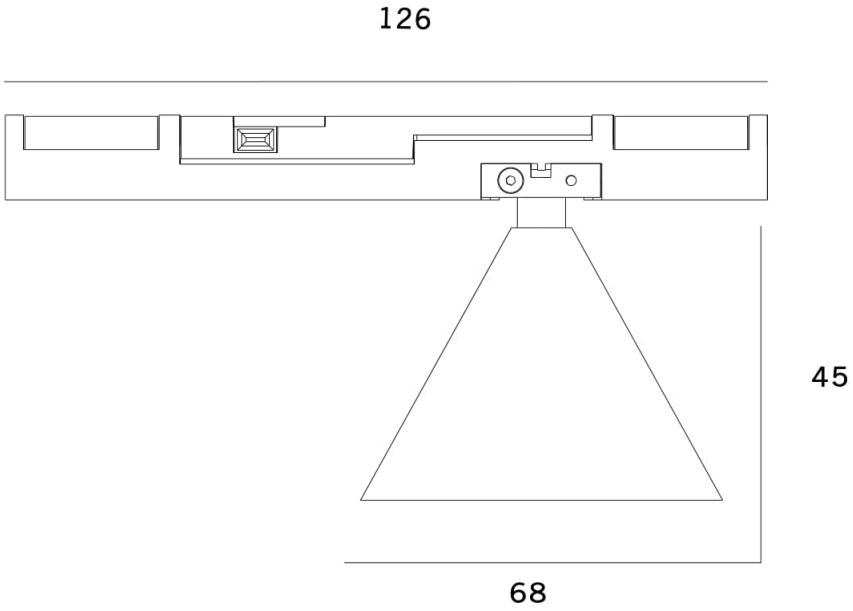

Models

Code	Power	Voltage	CRI	Size	Beam
CL-B	4 W	48 V DC	97 CRI	Ø68 × 45 × 126 mm	50°

Finishes

Black

White

Photometry

Polar curve, on-axis illuminance with beam diameter at 1–5 m, and key figures for CL-B, from the same data as the IES and LDT files on the product page. Estimated from catalogue data, not measured with a goniophotometer. Other models with the same beam share this distribution, scaled to their luminous flux.

CL-B, 4 W, 50° beam

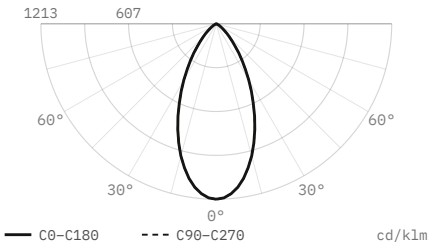

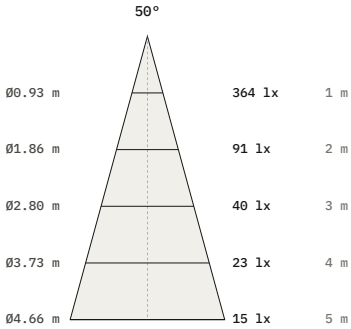

Luminous flux	300 lm
Efficacy	75 lm/W
Peak intensity	364 cd, 1,213 cd/klm
Beam angle (50%)	50°
Field angle (10%)	91.1°
Cut-off angle (2.5%)	57.5°
Flux 0–30° / 30–60° / 60–90°	64.8 / 33.6 / 1.5 %
Size	Ø68 × 45 mm
Data	Estimated from catalogue data

DiaNoche
service@dianoche.it
dianoche.it

Technical data may change without notice.