Track spotlights

C3-4836

Track spotlight

Track spotlight. 30 W. 25° or 40° beam. 3000, 4000 K. 97 CRI.

- LED source: Citizen

Power **30 W**	Luminous flux **1000–1100 lm**	Colour temperature **3000 K, 4000 K**
CRI **97 CRI**	Beam angles **25°, 40°**	IP rating **IP20**
Certifications **CE, RoHS, EMC, LVD**	Mounting **Recessed, Surface, Magnetic track**	Control **DALI, 0-10V, Triac**
Finishes **White, Black**		

Dimensions

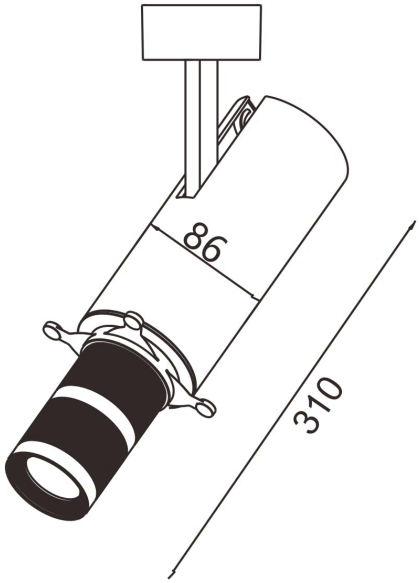

Models

Code	Version	Power	Flux	CRI	Size	Beam
C3-4836	Surface mount	30 W	1000–1100 lm	97 CRI	86 × 310 mm (60 at lens end)	25° 40°

Photometry

Polar curve, on-axis illuminance with beam diameter at 1–5 m, and key figures for C3-4836, from the same data as the IES and LDT files on the product page. Calculated from catalogue data, not measured with a goniophotometer. Other models with the same beam share this distribution, scaled to their luminous flux.

C3-4836, 30 W, 25° beam

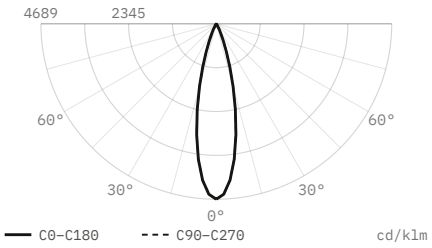

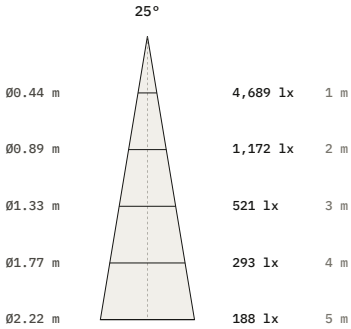

Luminous flux	1,000 lm
Efficacy	33 lm/W
Peak intensity	4,689 cd, 4,689 cd/klm
Beam angle (50%)	25°
Field angle (10%)	45.6°
Cut-off angle (2.5%)	28.5°
Flux 0–30° / 30–60° / 60–90°	98.2 / 1.8 / 0 %
Size	310 × 86 mm
Data	Calculated from catalogue data

C3-4836, 30 W, 40° beam

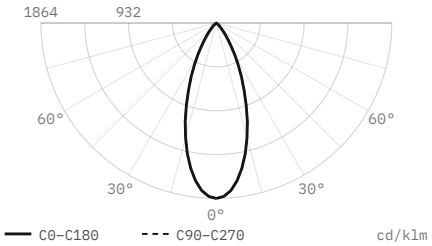

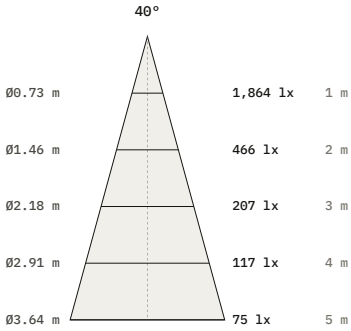

Luminous flux	1,000 lm
Efficacy	33 lm/W
Peak intensity	1,864 cd, 1,864 cd/klm
Beam angle (50%)	40°
Field angle (10%)	72.9°
Cut-off angle (2.5%)	46°
Flux 0–30° / 30–60° / 60–90°	79.9 / 19.9 / 0.2 %
Size	310 × 86 mm
Data	Calculated from catalogue data

DiaNoche
Via Tortona, 31, 20144 Milano MI, Italy
service@dianoche.it
dianoche.it

Technical data may change without notice.