Surface

# C3-4312

Surface luminaire

Surface luminaire. 10 W. 15° or 60° beam. 3000, 4000 K. 97 CRI.

- LED source: Citizen

| | | |
|---|---|---|
| Power<br>**10 W** | Luminous flux<br>**1000–1100 lm** | Colour temperature<br>**3000 K, 4000 K** |
| CRI<br>**97 CRI** | Beam angles<br>**15°, 60°** | IP rating<br>**IP20** |
| Certifications<br>**CE, RoHS, EMC, LVD** | Mounting<br>**Surface** | Control<br>**DALI, 0-10V, Triac, Casambi** |
| Finishes<br>**White, Black, Grey** | | |

## Dimensions

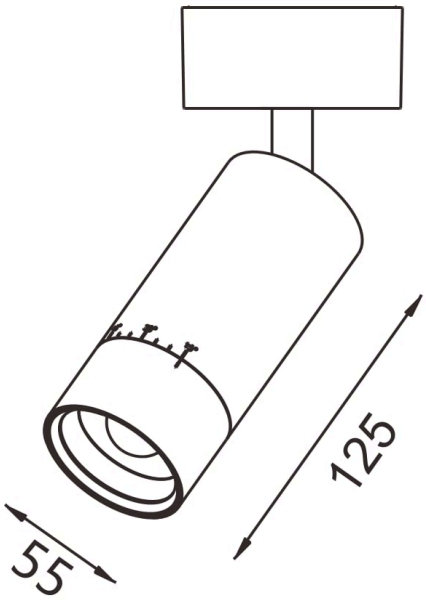


## Models

| Code | Power | Flux | CRI | Size | Beam |
|---|---|---|---|---|---|
| **C3-4312** | 10 W | 1000–1100 lm | 97 CRI | 55 × 125 mm | 15° 60° |

## Photometric data

Illuminance on the beam axis (lx) and beam diameter at each mounting distance, per model and beam angle. IES files for every model and beam can be downloaded from the product page.

### 10 W

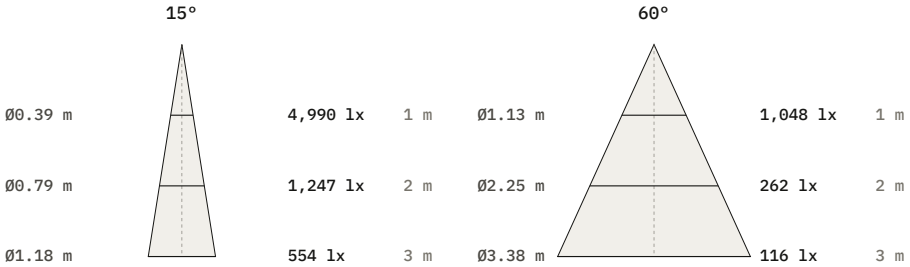


| Beam | 1 m | 2 m | 3 m |
|---|---|---|---|
| 15° | 4,990 lx<br>Ø390 mm | 1,247 lx<br>Ø790 mm | 554 lx<br>Ø1180 mm |
| 60° | 1,048 lx<br>Ø1130 mm | 262 lx<br>Ø2250 mm | 116 lx<br>Ø3380 mm |

# Photometry

Polar curve, on-axis illuminance with beam diameter at 1–5 m, and key figures for C3-4312, from the same data as the IES and LDT files on the product page. Calculated from catalogue data, not measured with a goniophotometer. Other models with the same beam share this distribution, scaled to their luminous flux.

## C3-4312, 10 W, 15° beam

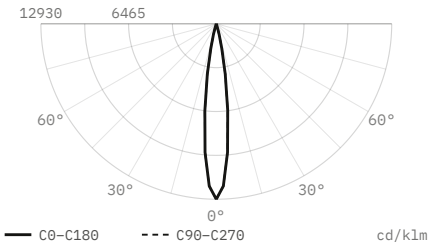


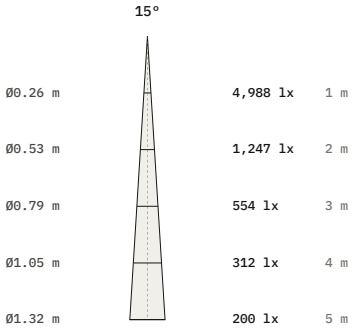


| | |
|---|---|
| Luminous flux | 386 lm |
| Efficacy | 39 lm/W |
| Peak intensity | 4,988 cd, 12,930 cd/klm |
| Beam angle (50%) | 15° |
| Field angle (10%) | 27.3° |
| Cut-off angle (2.5%) | 17° |
| Flux 0–30° / 30–60° / 60–90° | 100 / 0 / 0 % |
| Size | 125 × 55 mm |
| Data | Calculated from catalogue data |

## C3-4312, 10 W, 60° beam

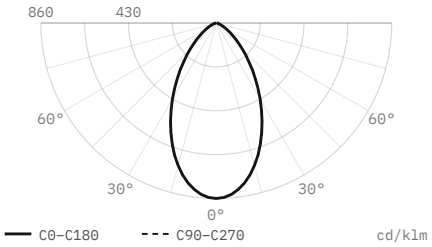


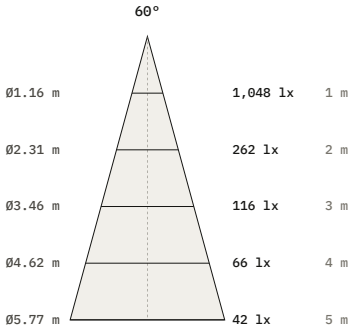


| | |
|---|---|
| Luminous flux | 1,218 lm |
| Efficacy | 122 lm/W |
| Peak intensity | 1,048 cd, 860 cd/klm |
| Beam angle (50%) | 60° |
| Field angle (10%) | 109.4° |
| Cut-off angle (2.5%) | 69° |
| Flux 0–30° / 30–60° / 60–90° | 52.4 / 42.6 / 5 % |
| Size | 125 × 55 mm |
| Data | Calculated from catalogue data |

DiaNoche
service@dianoche.it
dianoche.it

Technical data may change without notice.