Track spotlights

# 4833 Series R3-4833

Track spotlight

Track spotlight. 10 W. 20° or 35° beam. 3000, 4000 K. 97 CRI.

- Ceiling cut-out Ø70 mm
- LED source: Citizen

| | | |
|---|---|---|
| Power<br>**10 W** | Luminous flux<br>**520–580 lm** | Colour temperature<br>**3000 K, 4000 K** |
| CRI<br>**97 CRI** | Beam angles<br>**20°, 35°** | IP rating<br>**IP20** |
| Certifications<br>**CE, RoHS, EMC, LVD** | Mounting<br>**Recessed, Magnetic track** | Control<br>**DALI-2, 0-10V, Triac** |
| Finishes<br>**White, Black** | | |

## Dimensions

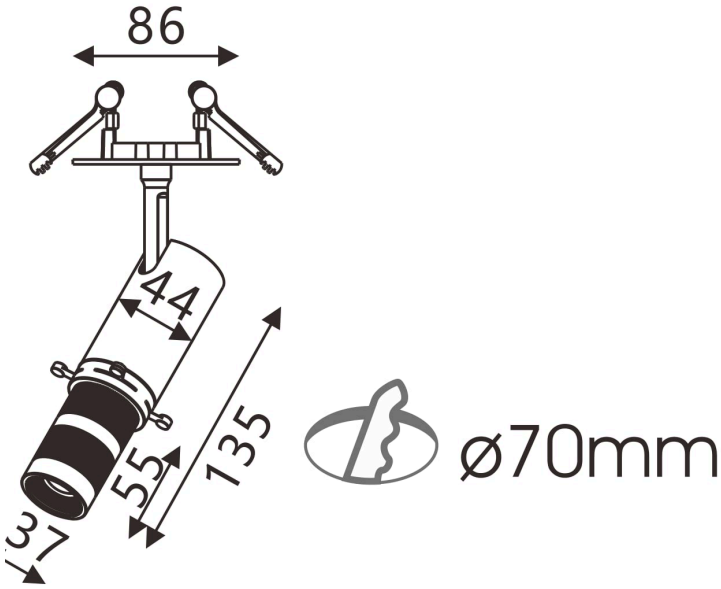


## Models

| Code | Version | Power | Flux | CRI | Size | Cut-out | Beam |
|---|---|---|---|---|---|---|---|
| **R3-4833** | Recessed | 10 W | 520–580 lm | 97 CRI | 44 × 135 mm | Ø70 mm | 20° 35° |

# Photometry

Polar curve, on-axis illuminance with beam diameter at 1–5 m, and key figures for R3-4833, from the same data as the IES and LDT files on the product page. Calculated from catalogue data, not measured with a goniophotometer. Other models with the same beam share this distribution, scaled to their luminous flux.

## R3-4833, 10 W, 20° beam

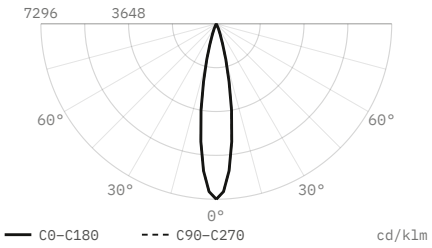


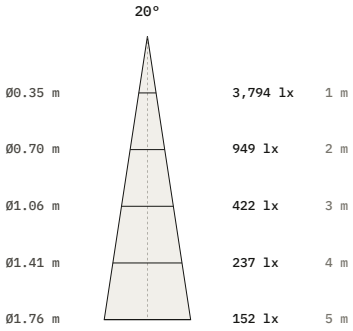


| | |
|---|---|
| Luminous flux | 520 lm |
| Efficacy | 52 lm/W |
| Peak intensity | 3,794 cd, 7,296 cd/klm |
| Beam angle (50%) | 20° |
| Field angle (10%) | 36.5° |
| Cut-off angle (2.5%) | 23° |
| Flux 0–30° / 30–60° / 60–90° | 99.8 / 0.2 / 0 % |
| Size | 135 × 44 mm |
| Data | Calculated from catalogue data |

## R3-4833, 10 W, 35° beam

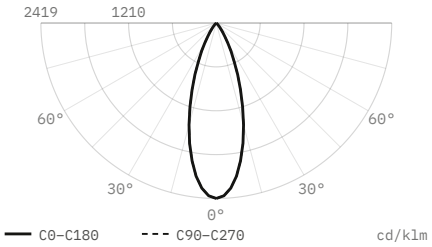


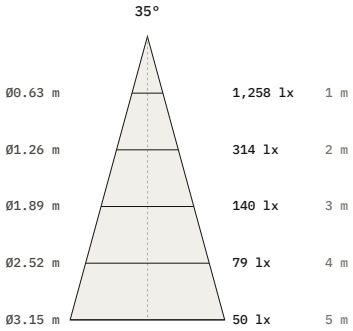


| | |
|---|---|
| Luminous flux | 520 lm |
| Efficacy | 52 lm/W |
| Peak intensity | 1,258 cd, 2,419 cd/klm |
| Beam angle (50%) | 35° |
| Field angle (10%) | 63.8° |
| Cut-off angle (2.5%) | 40° |
| Flux 0–30° / 30–60° / 60–90° | 87.6 / 12.4 / 0 % |
| Size | 135 × 44 mm |
| Data | Calculated from catalogue data |

DiaNoche
service@dianoche.it
dianoche.it

Technical data may change without notice.